SONY
make.believe

Working Instructions
- mechanical -

Xperia Z1™
C6902, C6903, C6906, L39h

1277-9813 Rev 2
© Sony Mobile Communications AB – Company Internal

CONTENTS

1 Exterior Views 5
1.1 C6902, C6903, C6906, L39h 5
2 Tools 6
3 Disassembly 8
3.1 Window Back and Sheet Battery 8
3.2 Rear Cover Assy 10
3.3 Camera 12
3.4 Shield Camera 12
3.5 SIM Tray 13
3.6 Battery 13
3.7 Main PBA 14
3.8 Loudspeaker Holder 16
3.9 RF Cable A 17
3.10 Main Frame Assy and Front Cover 17
4 Replacement 19
4.1 Window Back 19
4.2 Sheet Battery 19
4.3 Rear Cover Assy 19
4.4 Camera 19
4.5 Shield Camera 20
4.6 SIM Tray 20
4.7 Battery 20
4.8 Loudspeaker Holder 20
4.9 RF Cable A 21
4.10 Main Frame Assy 21
4.11 Adhesive Earspeaker 22
4.12 Adhesive FPC Relay Bottom 23
4.13 Adhesive WP Audio Jack 24
4.14 Adhesive WP Camera Key 25
4.15 Adhesive WP Cover Rear 26
4.16 Adhesive WP Loudspeaker 27
4.17 Adhesive WP Main Frame Assy 28
4.18 Adhesive WP Side Key 30
4.19 Adhesive WP Window Back 31
4.20 BT + WLAN Flex Antenna 33
4.21 Camera Holder 34
4.22 Camera Key 35
4.23 Chat Camera 36
4.24 Chat Camera Holder 37

© Sony Mobile Communications AB – Company Internal

4.25 Core Unit Label 38
4.26 Cushion 1st Mic 39
4.27 Cushion 2nd Mic 40
4.28 Ear Speaker 41
4.29 FPC Assembly Audio Jack 42
4.30 FPC Assembly Charger 43
4.31 FPC Assembly Mic 44
4.32 FPC Assembly Relay 45
4.33 Front Cover 46
4.34 Gasket Charger 47
4.35 Gasket Side Key 48
4.36 Holder Magnetic Charger Connector 49
4.37 Liquid indicator 50
4.38 Loudspeaker 51
4.39 Magnetic charger connector 52
4.40 PBA Cellular Sub 53
4.41 PBA WLAN Sub 54
4.42 Plate Contact RF A 55
4.43 Power Key 56
4.44 RF Cable B 57
4.45 SD Cap 58
4.46 Sheet Conductive Charger FPC 59
4.47 Sheet Conductive Relay FPC 60
4.48 Sheet Thermal A 61
4.49 Sheet Thermal B 62
4.50 Sheet WP 2nd Mic 63
4.51 Sheet WP Check 64
4.52 SIM Cap 65
4.53 Speaker Panel 66
4.54 Tray Core Unit Label 67
4.55 USB Cap 68
4.56 USB Holder 69
4.57 Vibrator 70
4.58 Volume Key 71
4.59 Board Swap - Replacement 72
5 Re-Assembly 73
5.1 Front Cover and Main Frame Assy 73
5.2 RF Cable A 74
5.3 Loudspeaker Holder 74
5.4 Main PBA 75
5.5 Battery 76

© Sony Mobile Communications AB – Company Internal

5.6 SIM Tray 76
5.7 Shield Camera 77
5.8 Camera 77
5.9 Rear Cover Assy 78
5.10 Sheet Battery 80
5.11 Window Back 80
6 Revision History 82

For general information about mechanical repair related issues, refer to 1220-1333: Generic Repair Manual - mechanical

© Sony Mobile Communications AB – Company Internal

1 Exterior Views

1.1 C6902, C6903, C6906, L39h

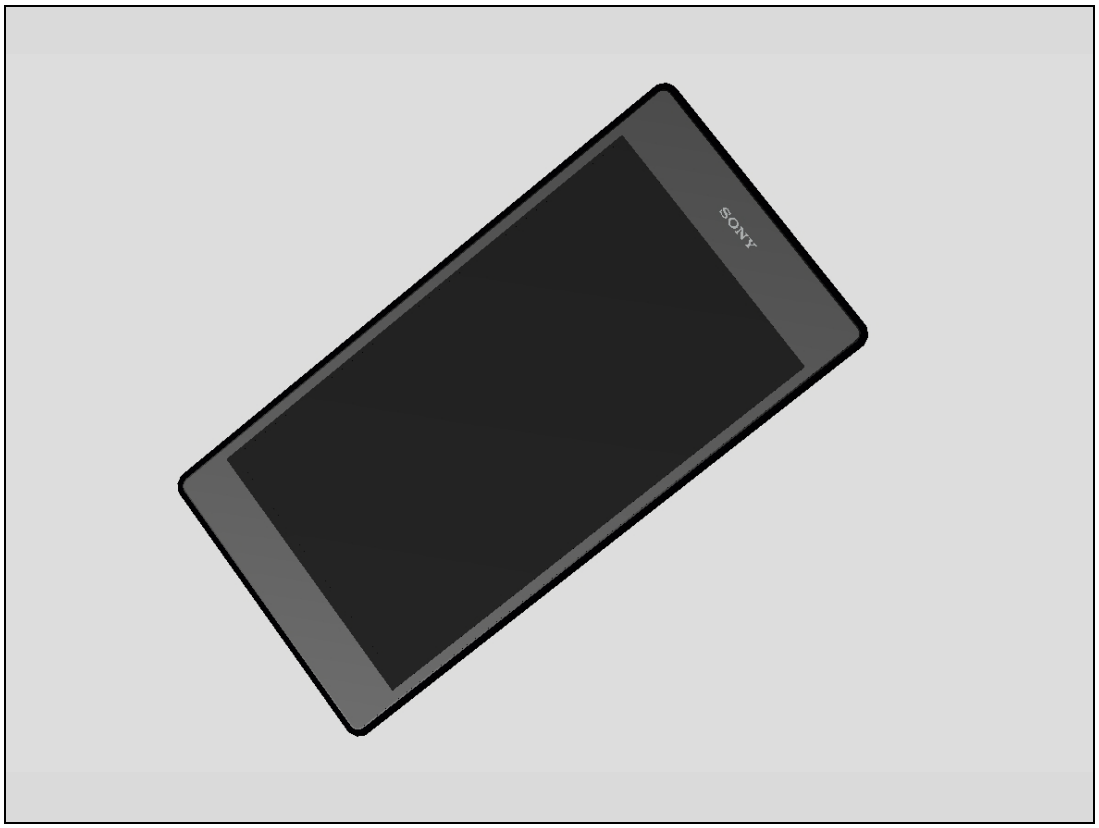

© Sony Mobile Communications AB – Company Internal

2 Tools

SPECIAL TOOLS

1. Torque Screwdriver
2. Front Opening Tool
3. Torx Bits T4
4. Flex Film Assembly Tool
5. Guitar Pick

6. Front Cover Adhesive fixture
7. Rear Cover Adhesive fixture
8. Window Back Adhesive fixture
9. Rear Cover Press Inlay
10. Window Back Press Inlay
11. Bottom Press Inlay

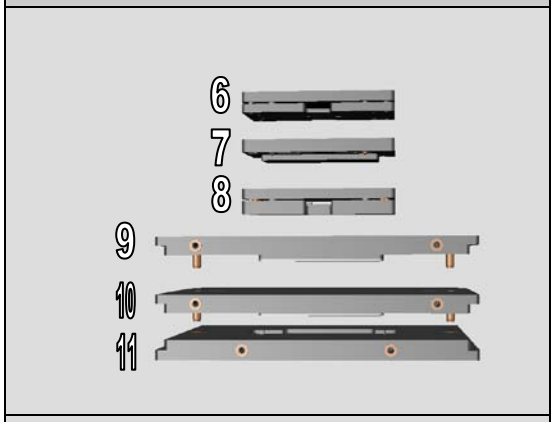

12. Press Tool Earspeaker
13. Press Tool Loudspeaker
14.Audio Jack press

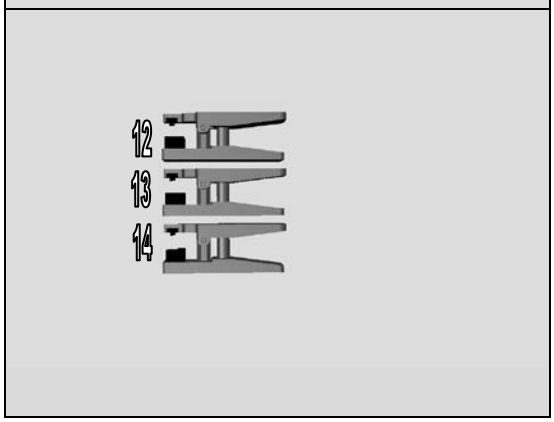

© Sony Mobile Communications AB – Company Internal

Tools

15. Side Panel press
16. Side Panel Press Head
17. Charge connector press pad

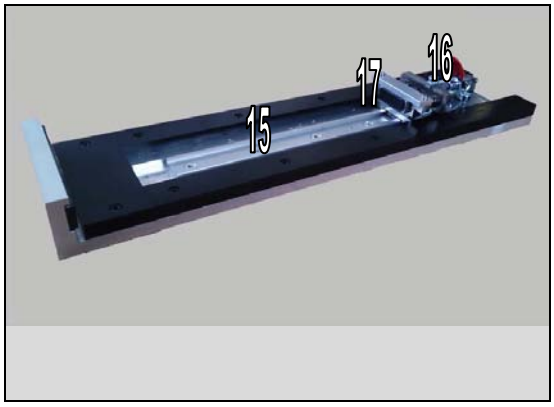

For part not on the tools above, refer to the 'Tools Catalogue/Matrix'!

STANDARD TOOLS

1. Dentist Hook
2. Nylon Pointer
3. Tweezer

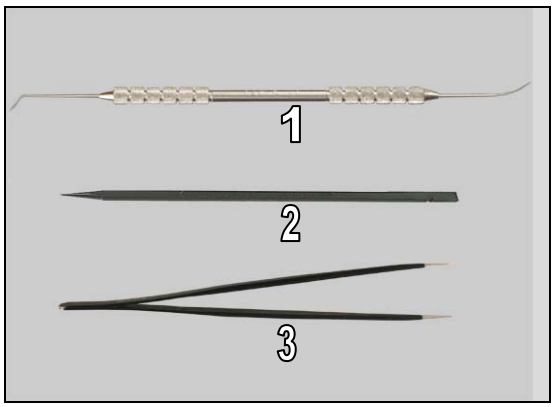

4. Suction cup

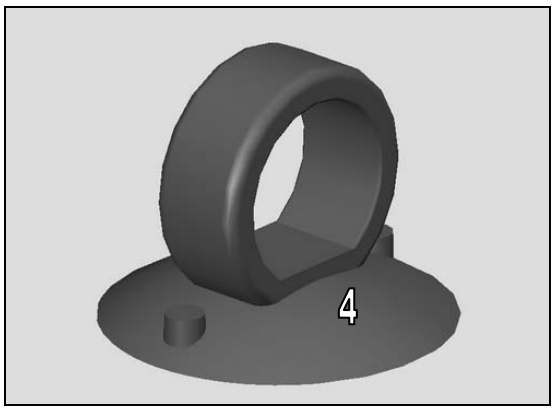

© Sony Mobile Communications AB – Company Internal

3 Disassembly

C6902, C6903, C6906, L39h

The Disassembly is done to the following modules:

1. Window Back (a) and Sheet Battery (b)
2. Rear Cover Assy
3. Camera
4. Shield Camera
5. SIM Tray
6. Battery
7. Main PBA
8. Loudspeaker Holder
9. RF Cable A
10. Main Frame Assy (a) and Front Cover (b)

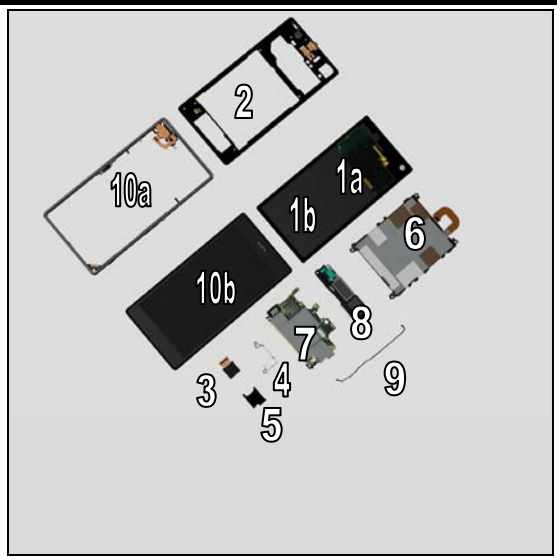

3.1 Window Back and Sheet Battery

Use Suction cup to get space for inserting the Guitar Pick.

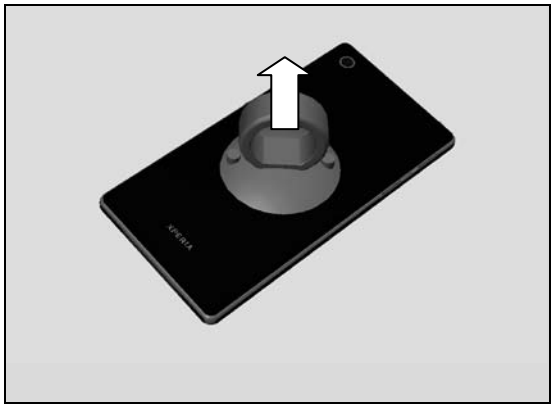

© Sony Mobile Communications AB – Company Internal

Disassembly

Gently slide the Guitar Pick along to release all sides of the Back Panel Assy.
Note! Start in the middle of the right long side!

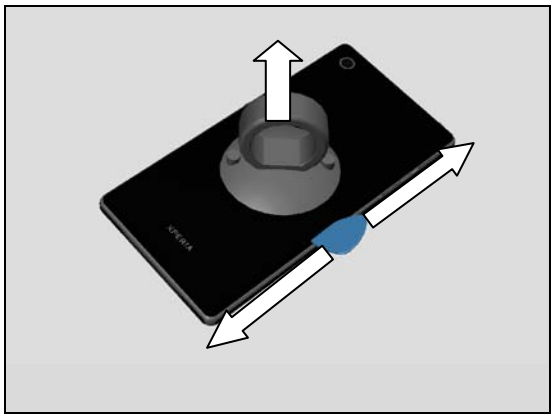

Note! Be careful not to damage flexes when using plectrum on the top of phone!

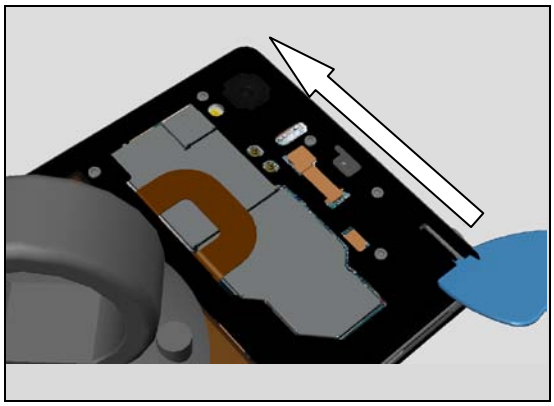

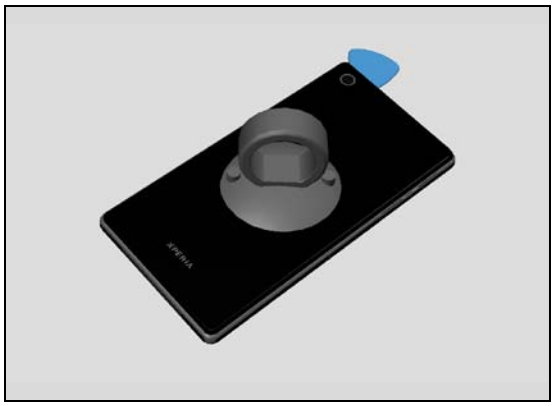

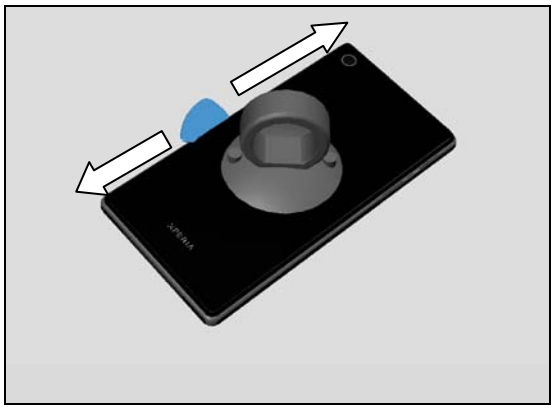

© Sony Mobile Communications AB – Company Internal

Disassembly

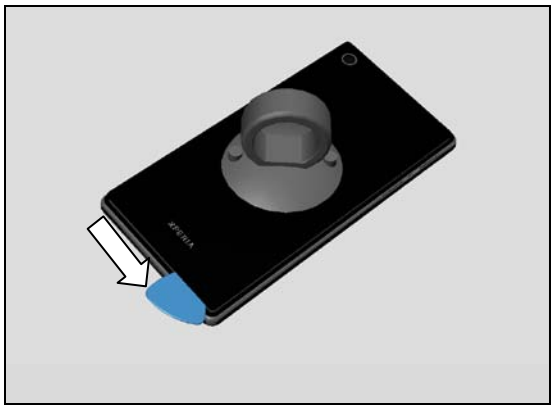

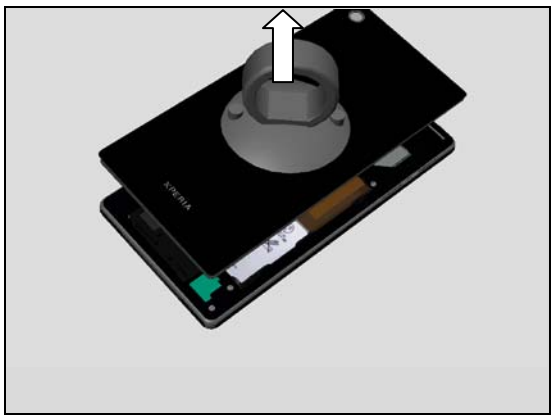

Remove the Window Back by using the Suction cup.
Note! Be careful when removing the Window back due to the adhesive between battery and Window Back.

3.2 Rear Cover Assy

Remove the nine Screw 3.5x1.4 by using a screwdriver with Torx Bits T4.

© Sony Mobile Communications AB – Company Internal

Disassembly

Use a plectrum to detach right side and the top of the phone

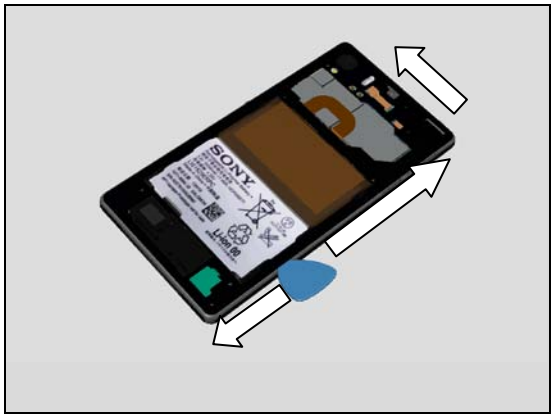

Use a plectrum to detach left side and the bottom of the phone

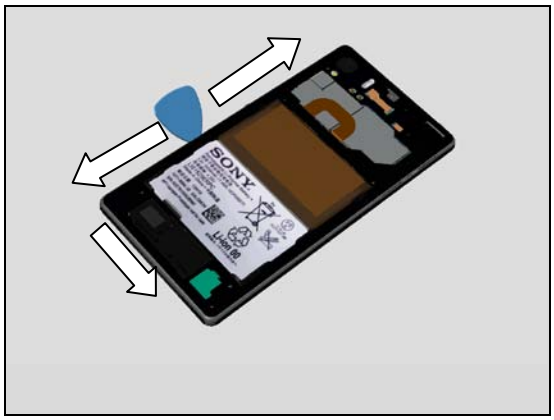

Use a Front Opening Tool to disconnect the BtB connector.

Remove the Rear Cover Assy with fingers

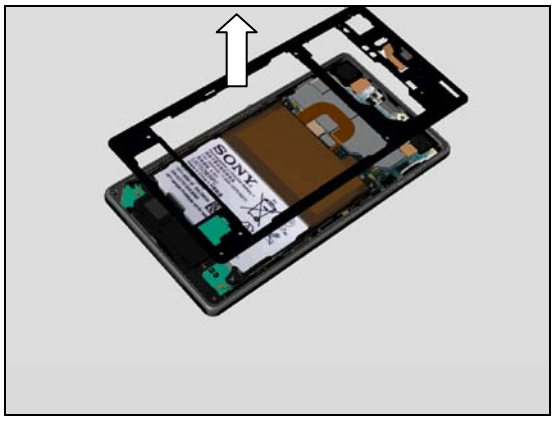

© Sony Mobile Communications AB – Company Internal

Disassembly

Use a Front Opening Tool to disconnect the BtB connector.

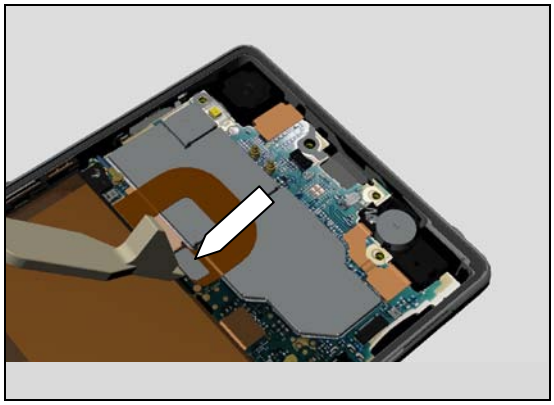

3.3 Camera

Use a Front Opening Tool to disconnect the BtB connector.

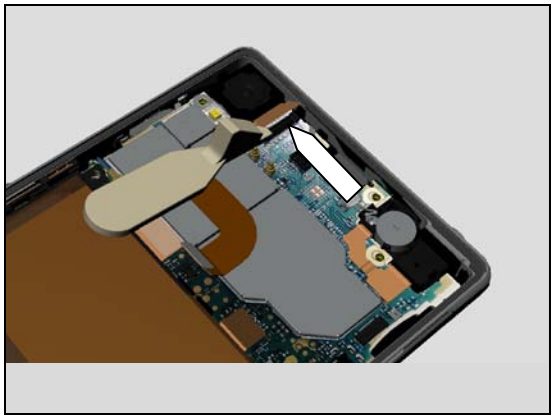

Remove the Camera with fingers.

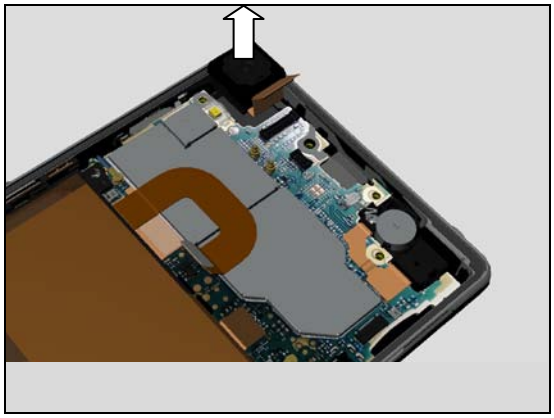

3.4 Shield Camera

Remove the Shield Camera with fingers.

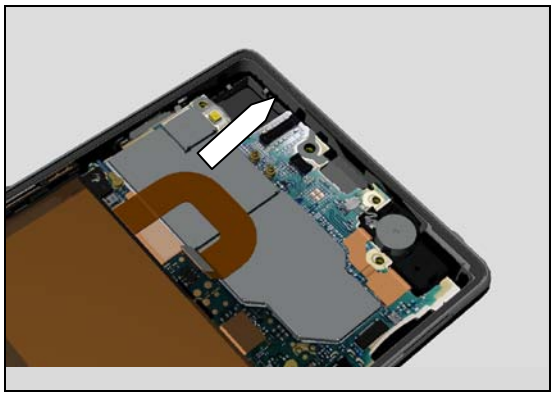

© Sony Mobile Communications AB – Company Internal

Disassembly

Remove it.

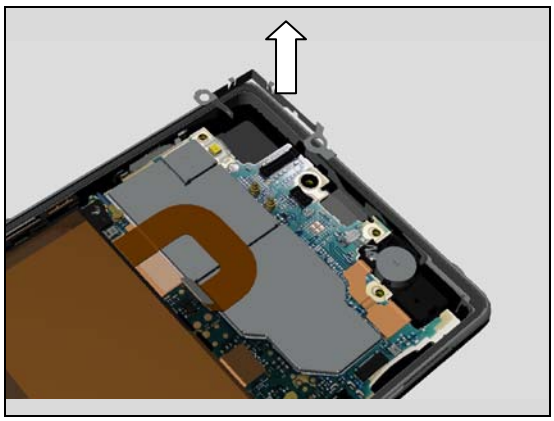

3.5 SIM Tray

Open SIM Cap.

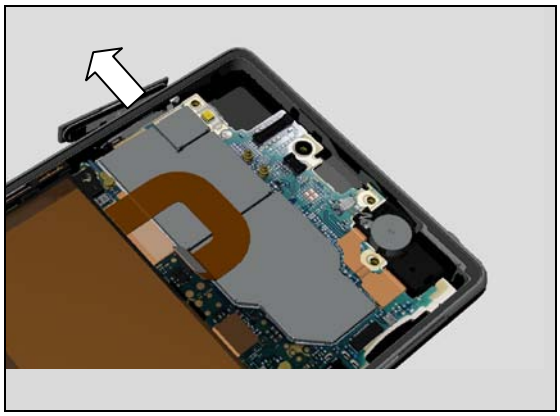

Remove the SIM Tray with fingers.

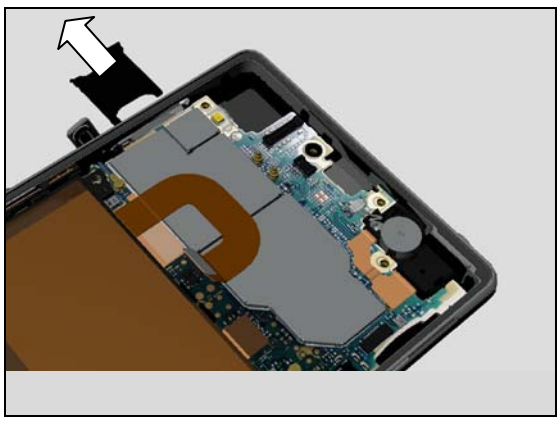

3.6 Battery

Remove the Battery with fingers.

Carefully inspect the Battery after removing it.
Battery with visual signs of been punctured etc. should be scraped after removal!

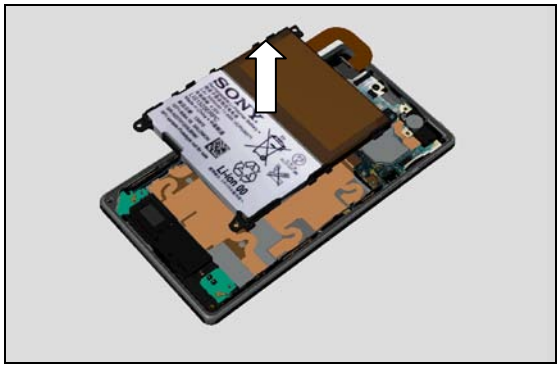

© Sony Mobile Communications AB – Company Internal

Disassembly

3.7 Main PBA

Use a Front Opening Tool to disconnect the Cable RF B

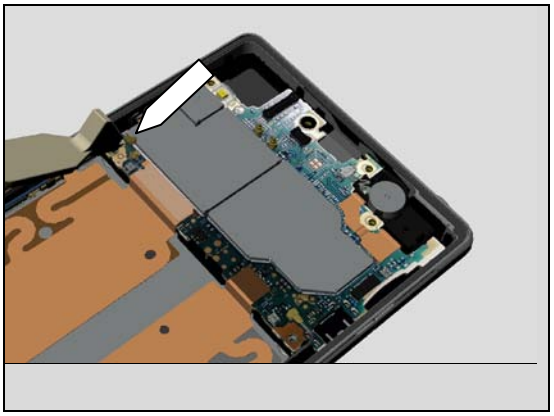

Use a Front Opening Tool to disconnect the Cable RF A

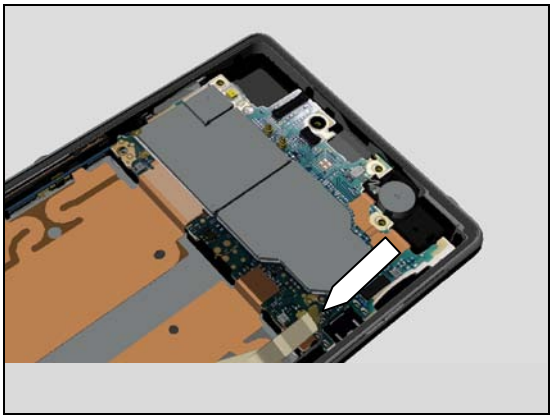

Use a Front Opening Tool to disconnect the FPC Assembly Charge

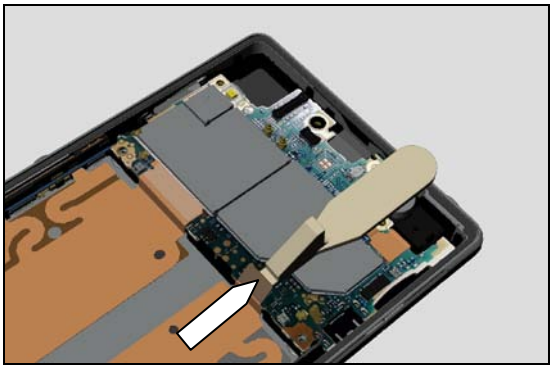

Use a Front Opening Tool to disconnect the FPC Assembly Audio Jack

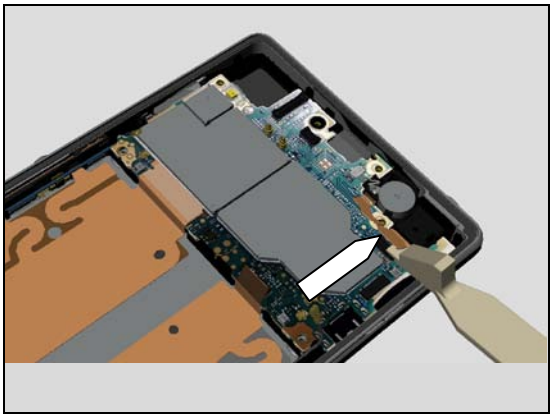

© Sony Mobile Communications AB – Company Internal

Disassembly

Use a Front Opening Tool to disconnect the Vibrator

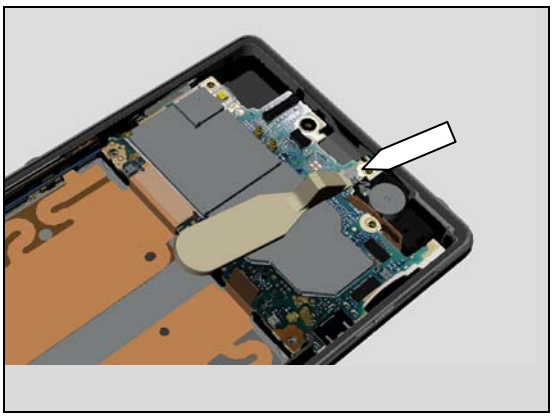

Use a Front Opening Tool to disconnect the FPC Assembly Relay

Use a Front Opening Tool to lift up the Main PBA.

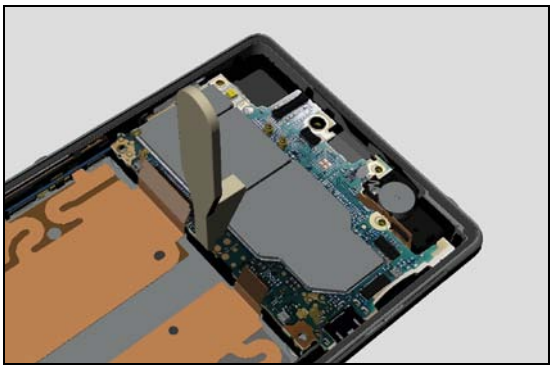

Use a Front Opening Tool to lift up the Main PBA.

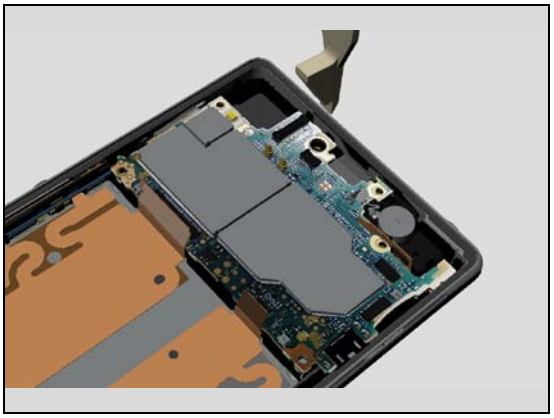

© Sony Mobile Communications AB – Company Internal

Disassembly

Remove the Main PBA with fingers

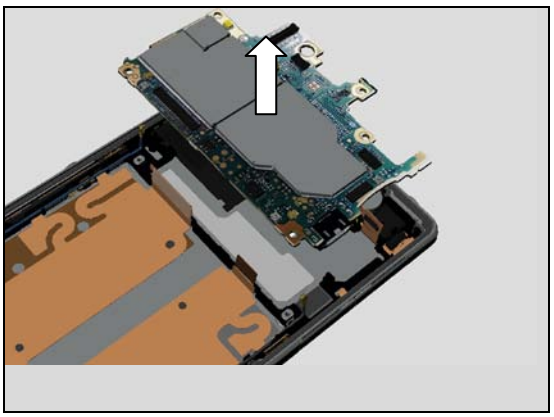

3.8 Loudspeaker Holder

Use a Front Opening Tool to disconnect the Cable RF B

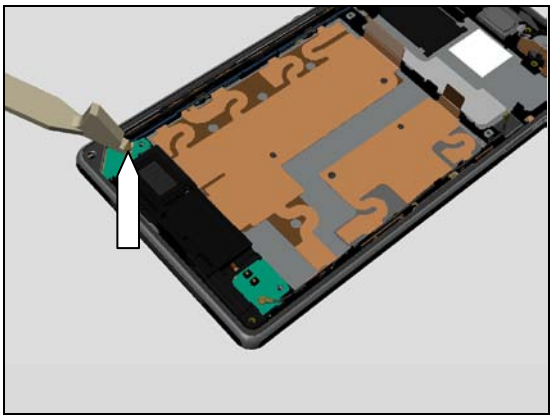

Use a Front Opening Tool to disconnect the Cable RF A

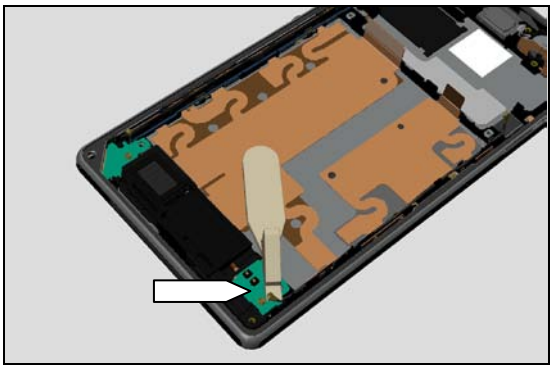

Use a Front Opening Tool to lift up the Loudspeaker Holder.

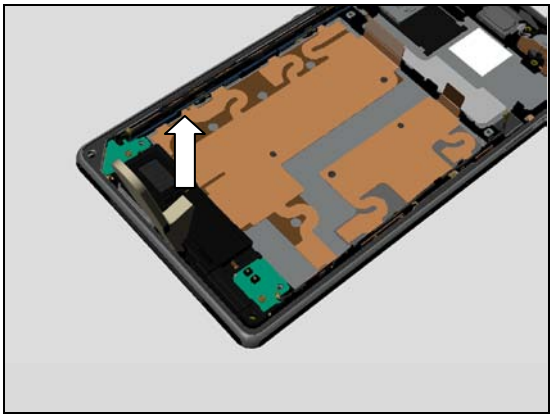

© Sony Mobile Communications AB – Company Internal

Disassembly

Remove the Loudspeaker Holder with fingers.

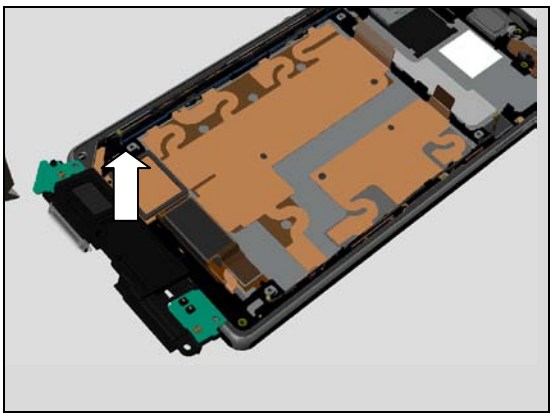

3.9 RF Cable A

Use a pair of tweezers to remove the RF Cable A

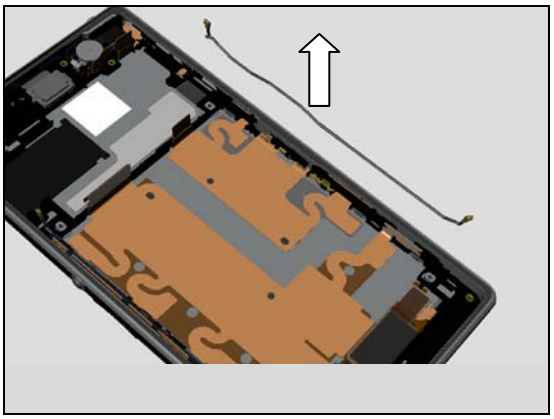

3.10 Main Frame Assy and Front Cover

Use Suction cup to get space for inserting the Guitar Pick. Gently slide the Guitar Pick along to release all sides of the Main Frame Assy.

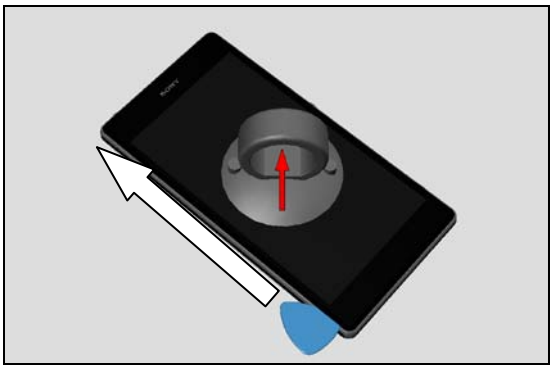

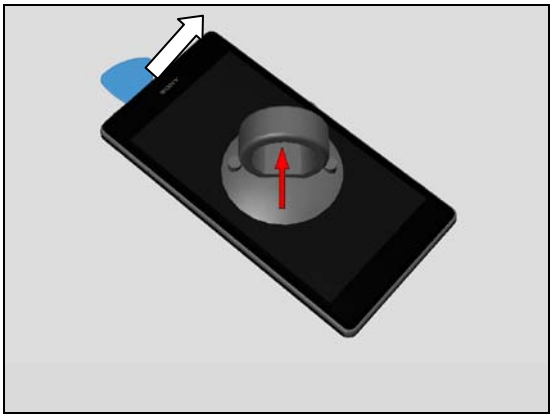

© Sony Mobile Communications AB – Company Internal

Disassembly

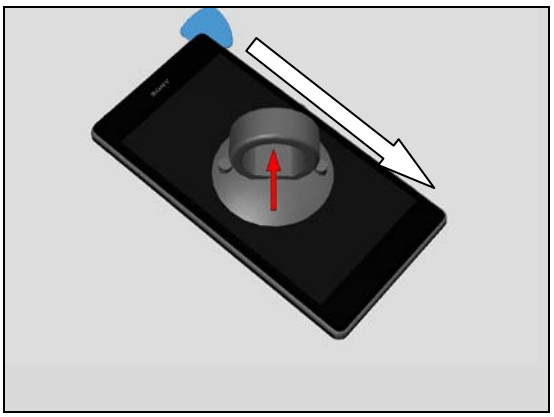

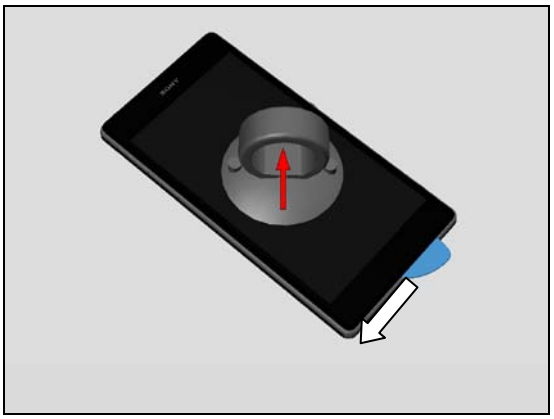

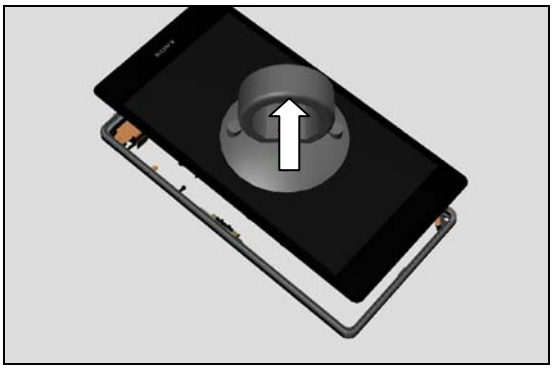

Remove the Front Cover from Main Frame Assy

© Sony Mobile Communications AB – Company Internal

4 Replacement

4.1 Window Back

Follow the 3.1 Disassembly instructions!
Note! If reuse of Window Back follow 4.19 Removal Instruction
Prepare a new Window Back.
Note! If reuse of Window Back follow 4.19 Installation Instruction
Follow the 5.11 Reassembly instructions!

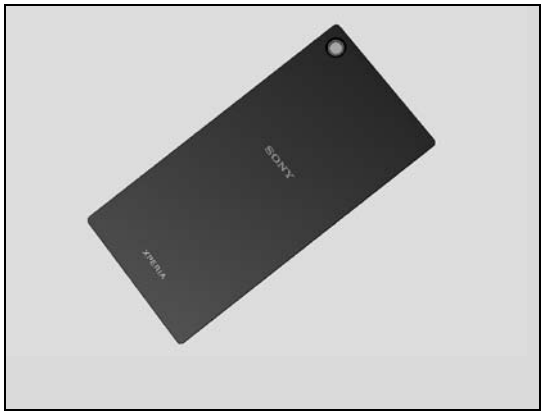

4.2 Sheet Battery

Follow the 3.1 Disassembly instructions and use a Flex Film Assembly Tool for removing it from Window Back!
Prepare a new Sheet Battery
Follow the 5.10 and 5.11 Reassembly instructions!

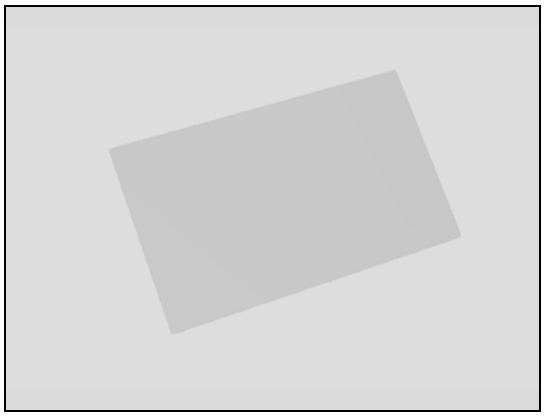

4.3 Rear Cover Assy

Follow the 3.1 and 3.2 Disassembly instructions!
Note! If reuse of Rear Cover Assy follow 4.15 Removal Instruction
Prepare a new Rear Cover Assy.
Note! If reuse of Rear Cover Assy follow 4.15 Installation Instruction
Follow the 5.9 - 5.11 Reassembly instructions!

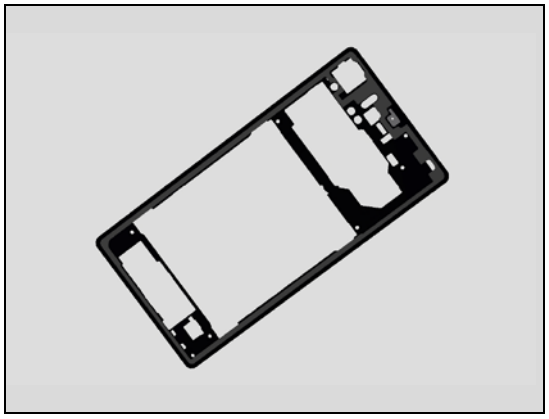

4.4 Camera

Follow the 3.1- 3.3 Disassembly instructions!
Prepare a new Camera.
Follow the 5.8 - 5.11 Reassembly instructions!

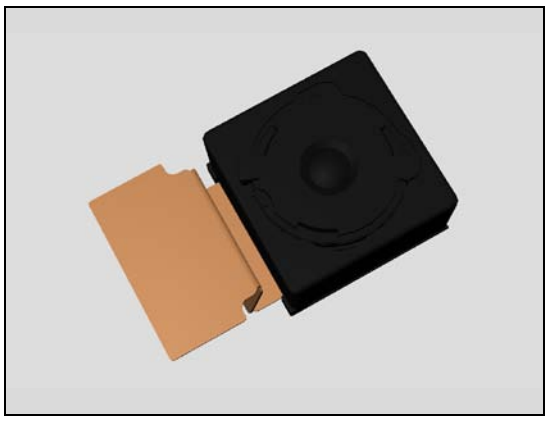

© Sony Mobile Communications AB – Company Internal

Replacement

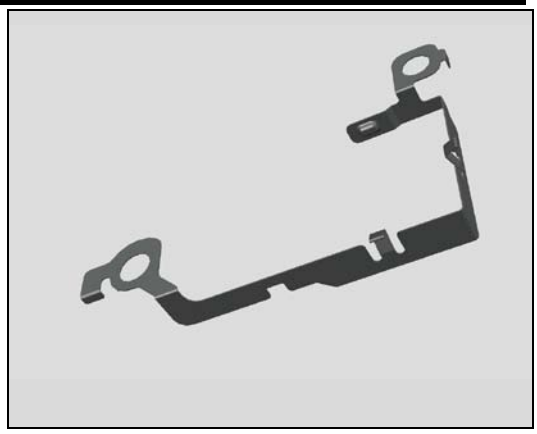

4.5 Shield Camera

Follow the 3.1 - 3.5 Disassembly instructions!
Prepare a new Shield Camera.
Follow the 5.7 - 5.11 Reassembly instructions!

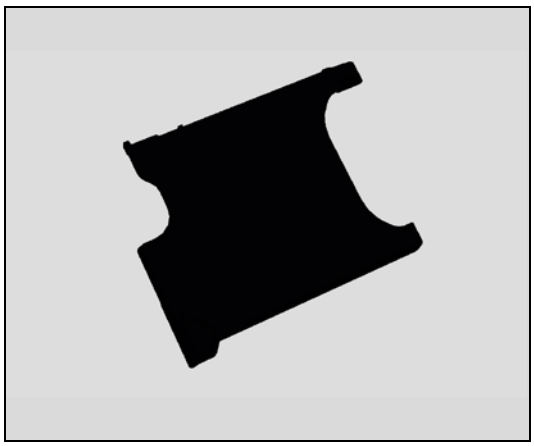

4.6 SIM Tray

Follow the 3.5 Disassembly instructions!
Prepare a new SIM Tray.
Follow the 5.6 Reassembly instructions!

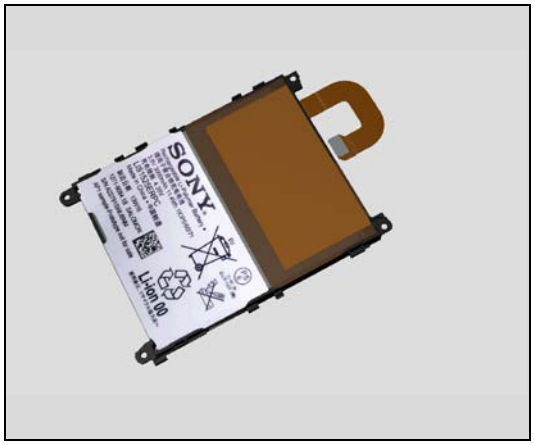

4.7 Battery

Follow the 3.1-3.2 and 3.6 Disassembly instructions!
Prepare a new Battery.
Follow the 5.5 and 5.9-5.11 Reassembly instructions!

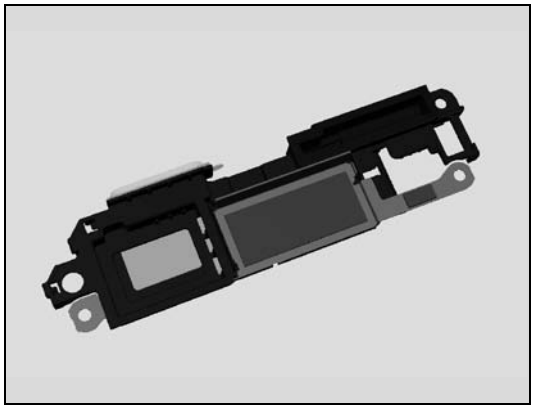

4.8 Loudspeaker Holder

Follow the 3.1 – 3.2, 3.6 and 3.8. Disassembly instructions!
Follow the 4.38, 4.40 and 4.41 Removal instructions!
Carry out the Removal as described below!
Prepare a new Loudspeaker Holder
Carry out the Installation as described below!
Follow the 4.38, 4.40 and 4.41 Installation instructions!
Follow the 5.3, 5.5 and 5.9 - 5.11 Reassembly instructions!

© Sony Mobile Communications AB – Company Internal

Replacement

4.9 RF Cable A

Follow the 3.1 - 3.2, 3.6 and 3.9 Disassembly instructions!
Prepare a new RF Cable A.
Follow the 5.2, 5.5 and 5.9-5.11 Reassembly instructions!

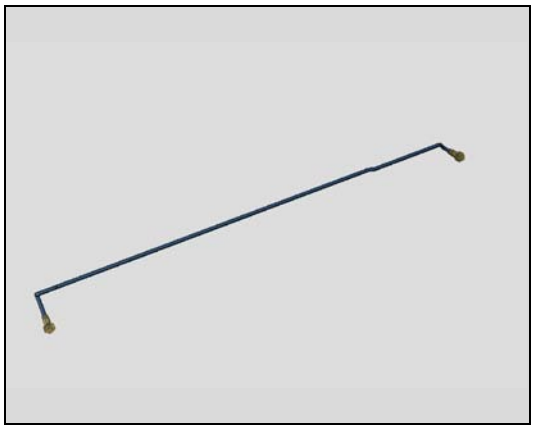

4.10 Main Frame Assy

Follow the 3.1-3.10 Disassembly instructions!
Note! If reuse of Main Frame Assy follow 4.17 Removal Instruction
Prepare a new Main Frame Assy.
Note! If reuse of Main Frame Assy follow 4.17 Installation Instruction
Follow the 5.1-5.11 Reassembly instructions!

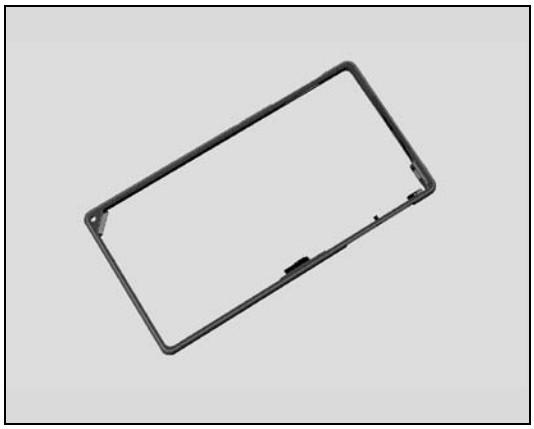

© Sony Mobile Communications AB – Company Internal

Replacement

4.11 Adhesive Earspeaker

Follow the 3.1 – 3.7 Disassembly instructions!
Follow the 4.28 Removal instructions!
Carry out the Removal as described below!
Prepare a new Adhesive Earspeaker!
Carry out the Installation as described below!
Follow the 4.28 Installation instructions!
Follow the 5.4 - 5.11 Reassembly instructions!

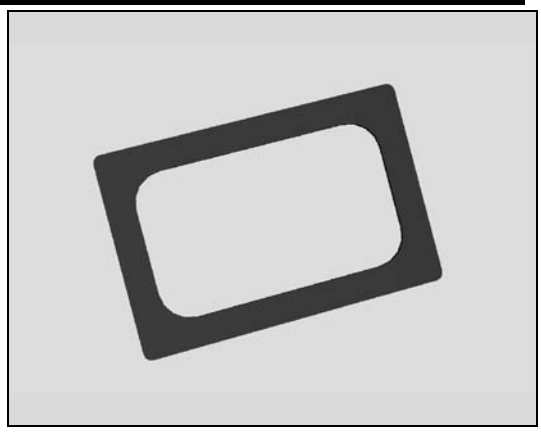

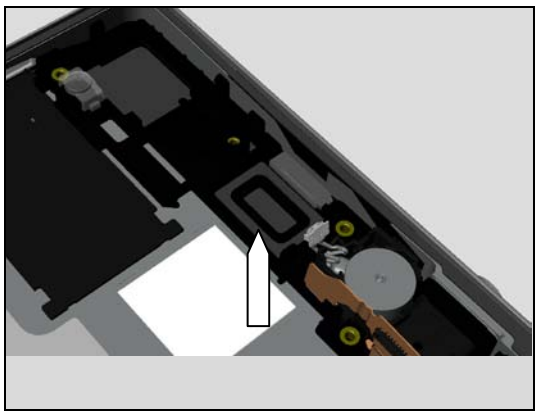

REMOVAL

Detach to remove the Adhesive Earspeaker with the Dentist Hook.
Scrap! Not to be reused!

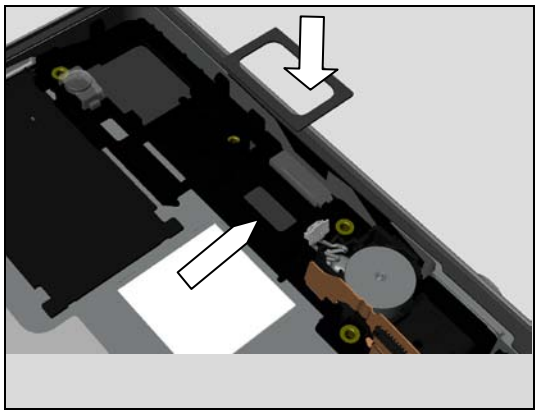

INSTALLATION

Place a new Adhesive Earspeaker using a Flex Film Assembly Tool.

© Sony Mobile Communications AB – Company Internal

Replacement

4.12 Adhesive FPC Relay Bottom

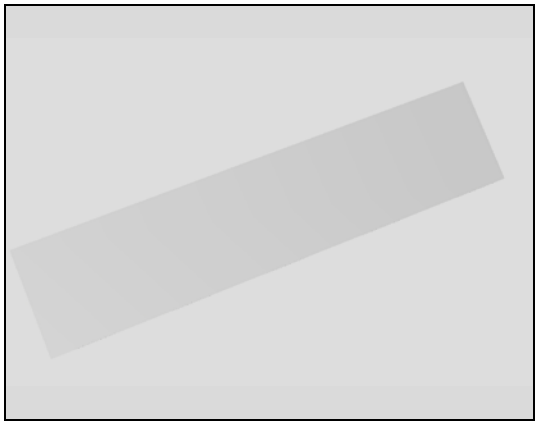

Follow the 3.1 – 3.10 Disassembly instructions!
Follow the 4.32 Removal instructions!
Carry out the Removal as described below!
Prepare a new Adhesive FPC Relay Bottom!
Carry out the Installation as described below!
Follow the 4.32 Installation instructions!
Follow the 5.1 - 5.11 Reassembly instructions!

REMOVAL

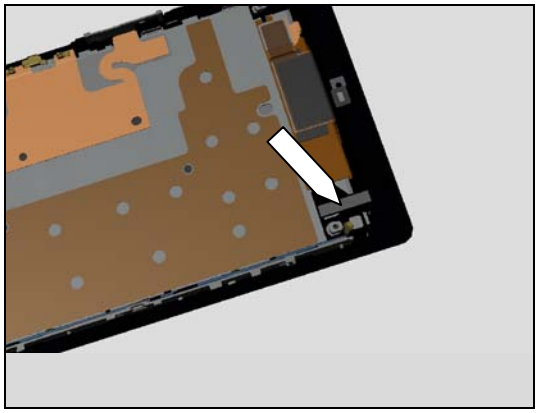

Detach to remove the Adhesive FPC Relay Bottom with a pair of tweezers.
Scrap! Not to be reused!

INSTALLATION

Place a new Adhesive FPC Relay Bottom using a Flex Film Assembly Tool.

© Sony Mobile Communications AB – Company Internal

4.13 Adhesive WP Audio Jack

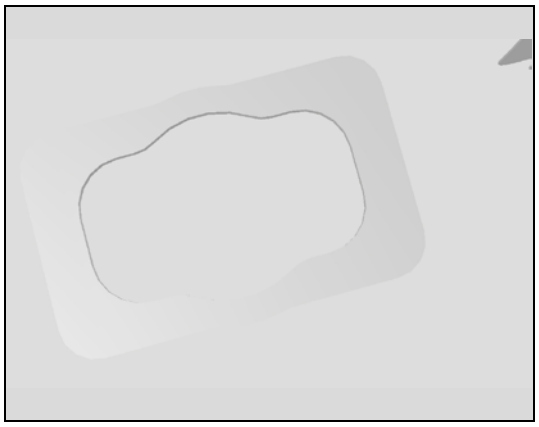

Follow the 3.1 – 3.10 Disassembly instructions!
Follow the 4.29 Removal instructions!
Carry out the Removal as described below!
Prepare a new Adhesive WP Audio Jack!
Carry out the Installation as described below!
Follow the 4.29 Installation instructions!
Follow the 5.1 - 5.11 Reassembly instructions!

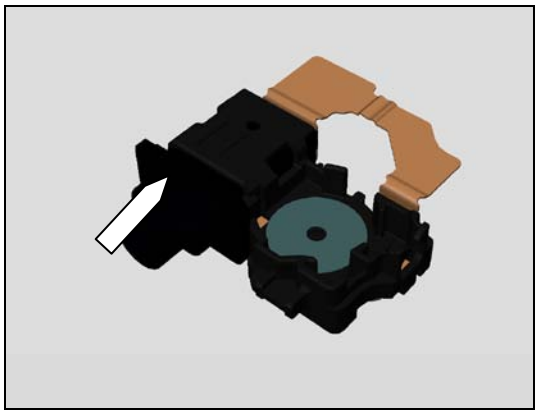

REMOVAL

Remove the Adhesive WP Audio Jack with the Flex Film Assembly Tool.
Scrap! Not to be reused!

INSTALLATION

Place a new Adhesive WP Audio Jack with Flex Film Assembly Tool.

© Sony Mobile Communications AB – Company Internal

Replacement

4.14 Adhesive WP Camera Key

Follow the 3.1 – 3-10 Disassembly instructions!
Carry out the Removal as described below!
Prepare a new Adhesive WP Camera Key!
Carry out the Installation as described below!
Follow the 5.1 - 5.11 Reassembly instructions!

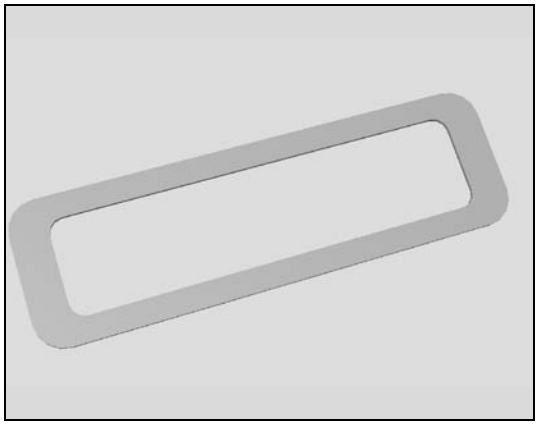

REMOVAL

Detach to remove the Gasket Camera Key with the Flex Film Assembly Tool.

Note! Please be careful when disassembly because this gasket needs to be reused!

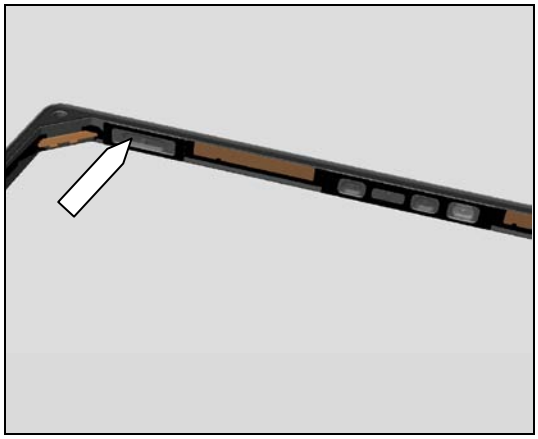

Detach to remove the Adhesive WP Camera Key with the Dentist Hook.

Scrap! Not to be reused!

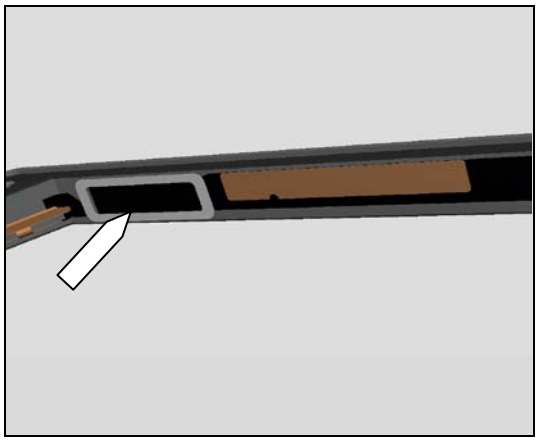

INSTALLATION

Place a new Adhesive WP Camera Key on the Main Frame Assy using a Flex Film Assembly Tool.

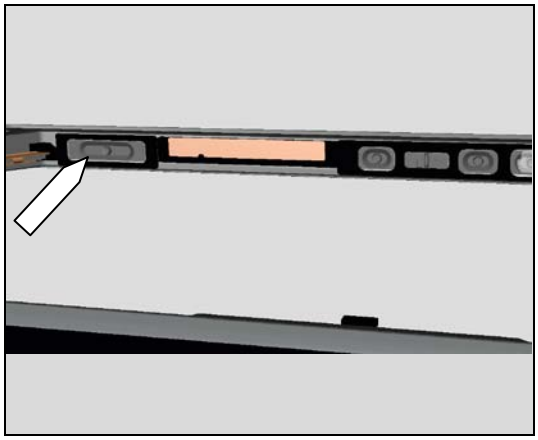

© Sony Mobile Communications AB – Company Internal

Replacement

4.15 Adhesive WP Cover Rear

Follow the 3.1 and 3.2 Disassembly instructions!
Carry out the Removal as described below!
Prepare a new Adhesive WP Cover Rear!
Carry out the Installation as described below!
Follow the 5.9 - 5.11 Reassembly instructions!

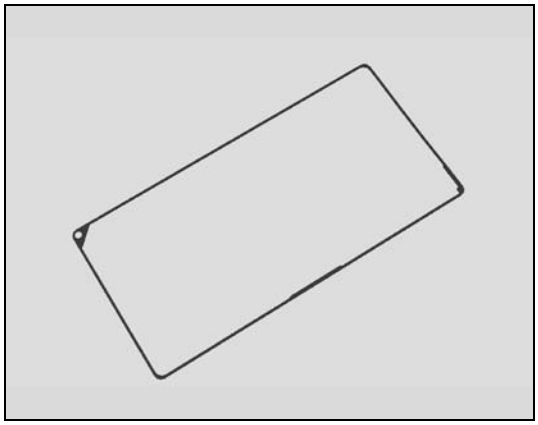

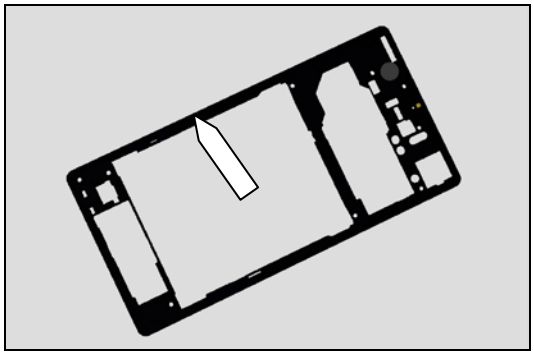

REMOVAL

Remove the Adhesive WP Cover Rear with fingers.
Scrap! Not to be reused!

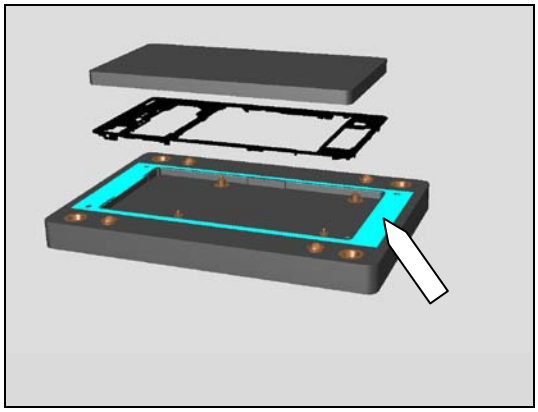

INSTALLATION

Place a new Adhesive WP Cover Rear with fingers in the Rear Cover Adhesive fixture (Bottom Part).

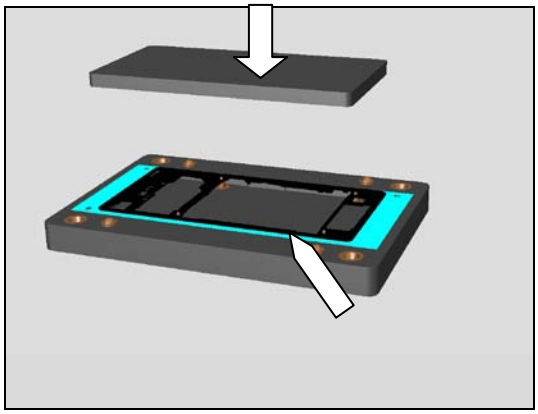

Then place the old Rear Cover Assy above Adhesive WP Cover Rear Important to make sure that old adhesive is removed before installation because of WRT requirement!

Place the Upper part of the fixture and press by hand for 10 sec

© Sony Mobile Communications AB – Company Internal

4.16 Adhesive WP Loudspeaker

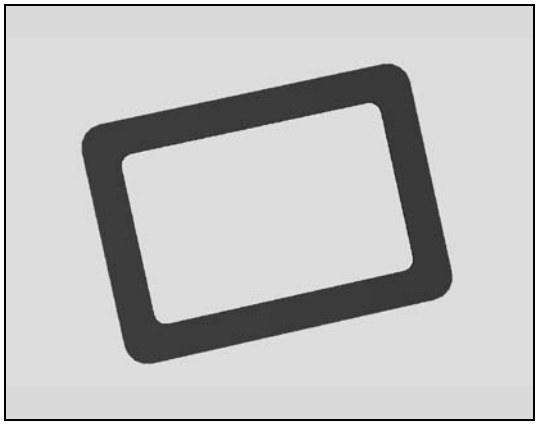

Follow the 3.1 – 3.2, 3.6 and 3.8. Disassembly instructions!
Follow the 4.38 Removal instructions!
Carry out the Removal as described below!
Prepare a new Adhesive WP Loudspeaker!
Carry out the Installation as described below!
Follow the 4.38 Installation instructions!
Follow the 5.3, 5.5 and 5.9 - 5.11 Reassembly instructions!

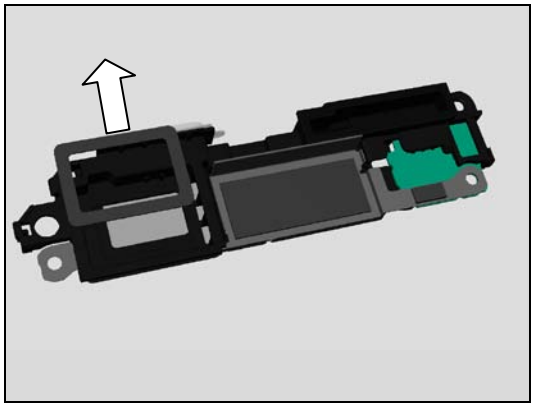

REMOVAL

Detach to remove the Adhesive WP Loudspeaker with a Dentist Hook.
Scrap! Not to be reused!

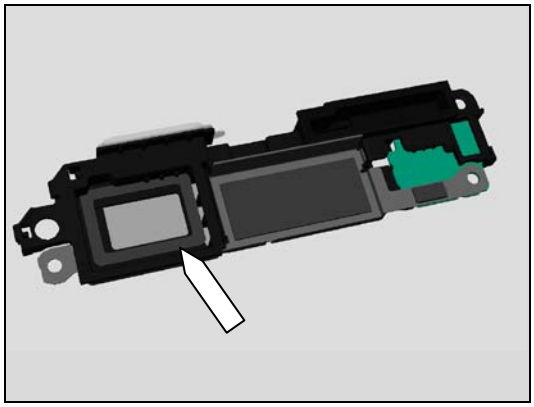

INSTALLATION

Place a new Adhesive WP Loudspeaker by using a Flex Film Assembly Tool.

© Sony Mobile Communications AB – Company Internal

Replacement

4.17 Adhesive WP Main Frame Assy

Follow the 3.1 - 3.10 Disassembly instructions!
Carry out the Removal as described below!
Prepare a new Adhesive WP Main Frame Assy!
Carry out the Installation as described below!
Follow the 5.1 - 5.11 Reassembly instructions!

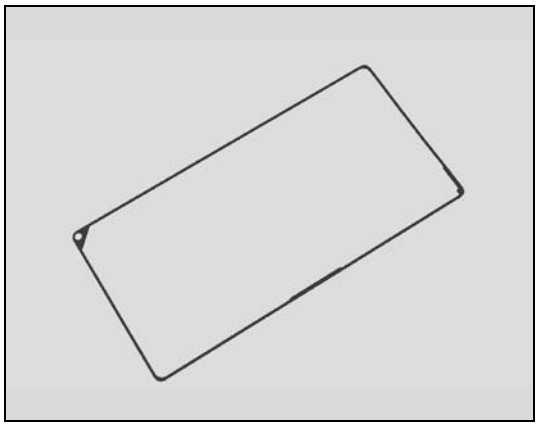

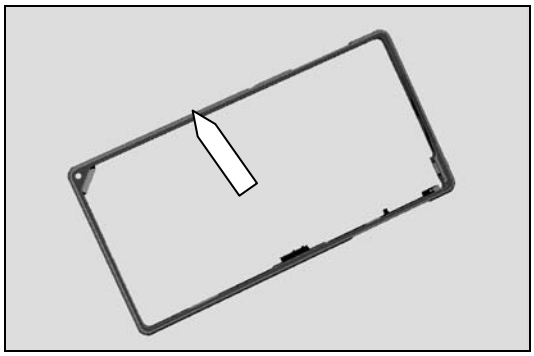

REMOVAL

Remove the Adhesive WP Main Frame Assy with fingers.
Scrap! Not to be reused!

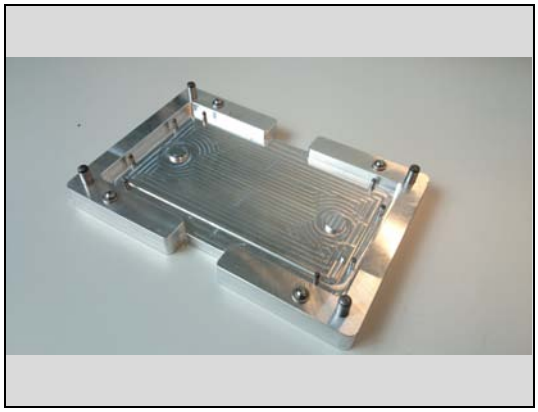

INSTALLATION

Take the Bottom Part of the Main Frame Assy Adhesive fixture

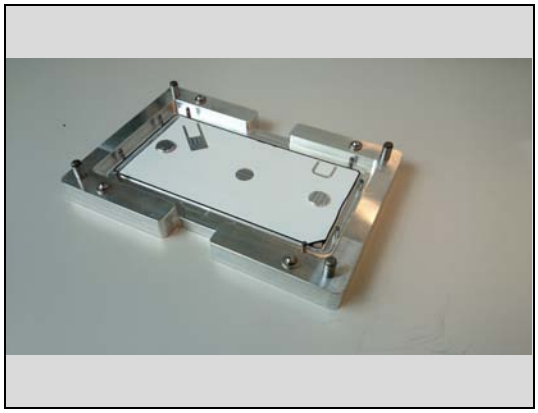

Place a new Adhesive WP Main Frame Assy with fingers in the Main Frame Assy Adhesive fixture (Bottom Part)

© Sony Mobile Communications AB – Company Internal

Replacement

Then place the old Main Frame Assy above the Adhesive WP Main Frame Assy
Important to make sure that old adhesive is removed before installation because of WRT requirement!

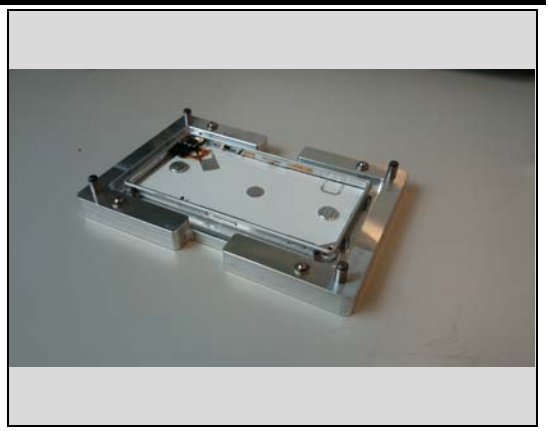

Place the Upper part of the fixture and press by hand for 10 sec

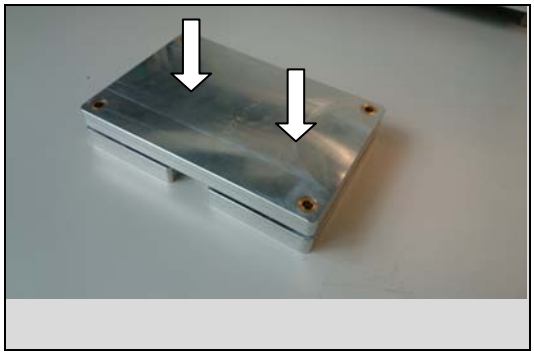

© Sony Mobile Communications AB – Company Internal

Replacement

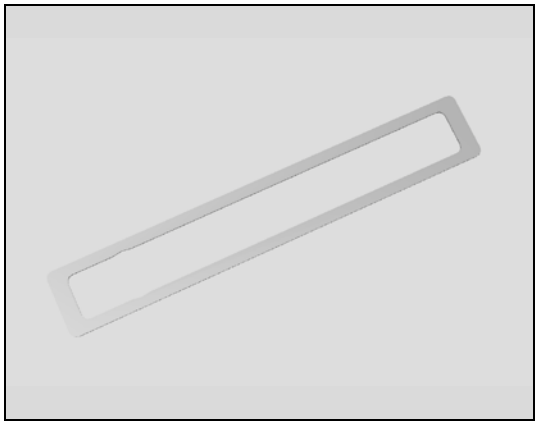

4.18 Adhesive WP Side Key

Follow the 3.1 - 3.10 Disassembly instructions!
Follow the 4.35 Removal instructions!
Carry out the Removal as described below!
Prepare a new Adhesive WP Side Key!
Carry out the Installation as described below!
Follow the 4.35 Installation instructions!
Follow the 5.1 - 5.11 Reassembly instructions!

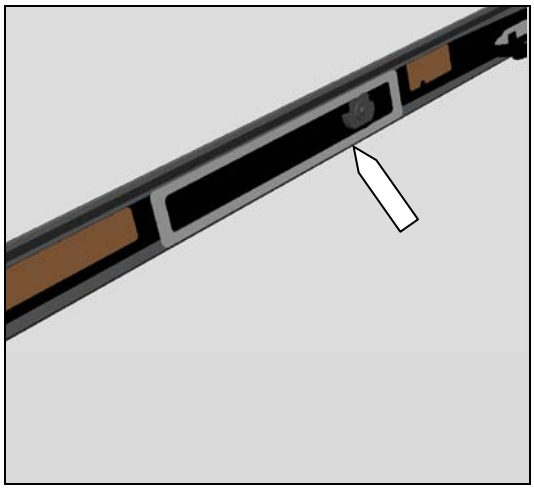

REMOVAL

Detach to remove the Adhesive WP Side Key with the Dentist Hook.
Scrap! Not to be reused!

INSTALLATION

Place a new Adhesive WP Side Key on the Main Frame Assy using a Flex Film Assembly Tool.

© Sony Mobile Communications AB – Company Internal

Replacement

4.19 Adhesive WP Window Back

Follow the 3.1 Disassembly instructions!
Carry out the Removal as described below!
Prepare a new Adhesive WP Window Back!
Carry out the Installation as described below!
Follow the 5.10 and 5.11 Reassembly instructions!

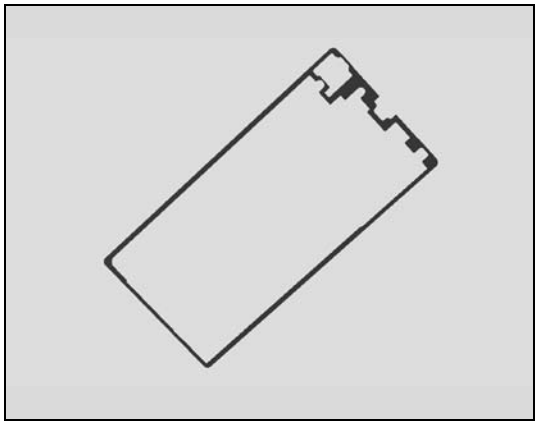

REMOVAL

Remove the Adhesive WP Window Back with fingers.
Scrap! Not to be reused!

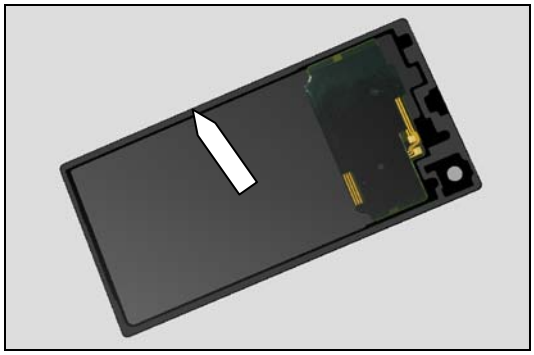

INSTALLATION

Take the Bottom Part of the Window Back Adhesive fixture

Place a new Adhesive WP Window Back with fingers in the Window Back Adhesive fixture (Bottom Part)

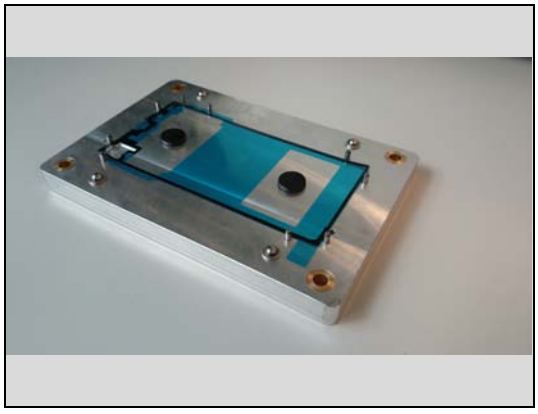

© Sony Mobile Communications AB – Company Internal

Replacement

Then place the old Window Back above the Adhesive WP Window Back
Important to make sure that old adhesive is removed before installation because of WRT requirement!

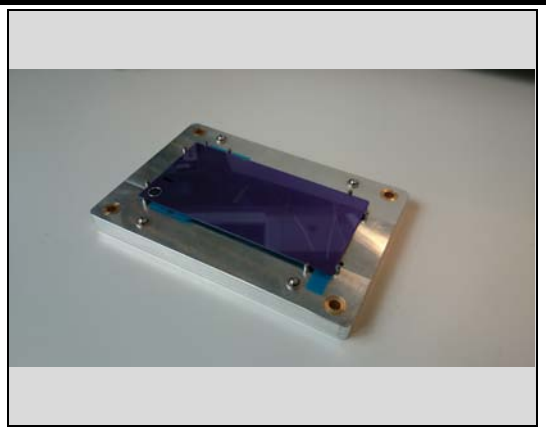

Place the Upper part of the fixture and press by hand for 10 sec

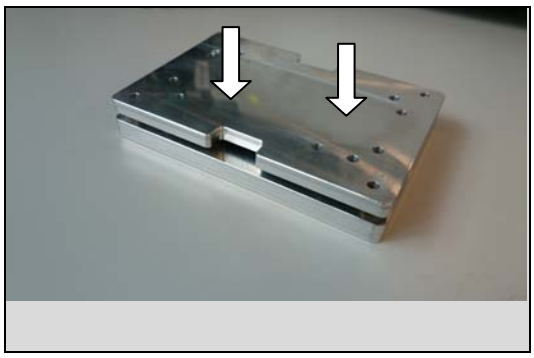

© Sony Mobile Communications AB – Company Internal

Replacement

4.20 BT + WLAN Flex Antenna

Follow the 3.1 Disassembly instructions!
Carry out the Removal as described below!
Prepare a new BT + WLAN Flex Antenna!
Carry out the Installation as described below!
Follow the 5.10 and 5.11 Reassembly instructions!

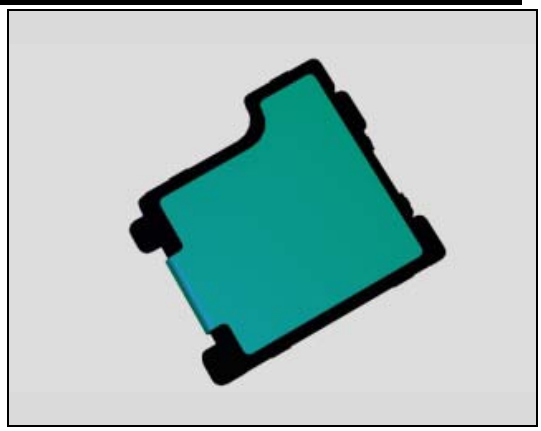

REMOVAL

Remove the BT + WLAN Flex Antenna with the Flex Film Assembly Tool.

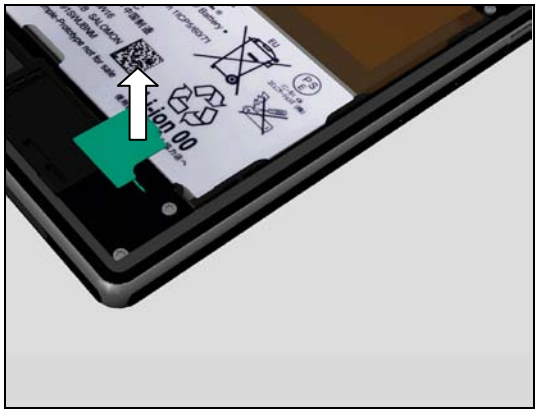

INSTALLATION

Place a new BT + WLAN Flex Antenna with fingers.

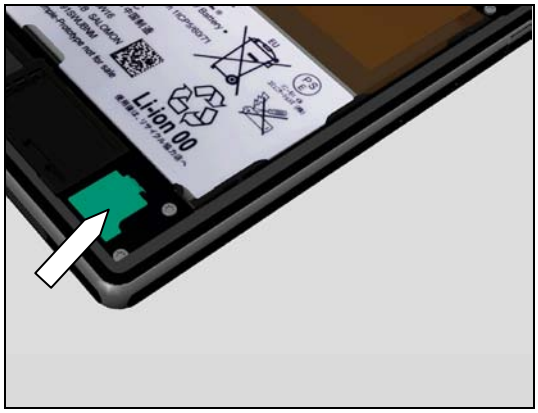

© Sony Mobile Communications AB – Company Internal

Replacement

4.21 Camera Holder

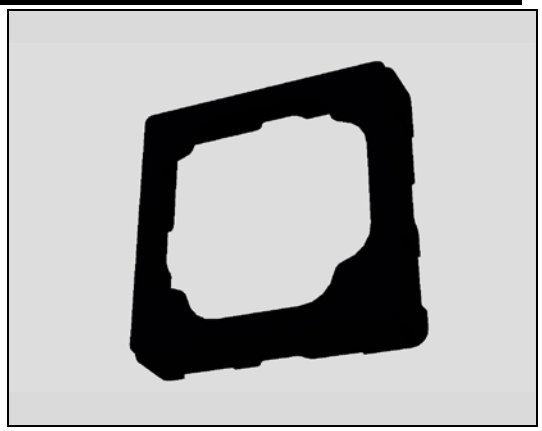

Follow the 3.1 - 3.3 Disassembly instructions!
Carry out the Removal as described below!
Prepare a new Camera Holder!
Carry out the Installation as described below!
Follow the 5.8 - 5.11 Reassembly instructions!

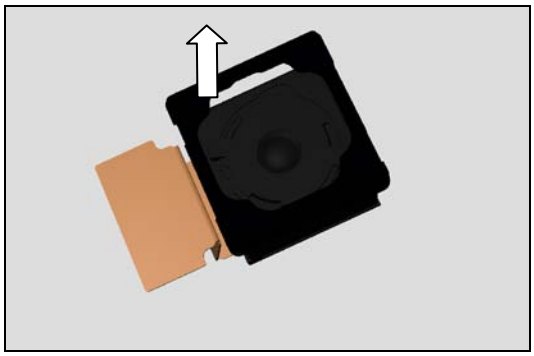

REMOVAL

Remove the Camera Holder with fingers.

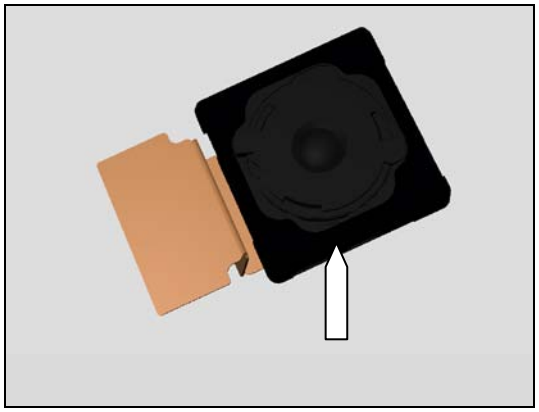

INSTALLATION

Attach the Camera Holder with fingers.

© Sony Mobile Communications AB – Company Internal

Replacement

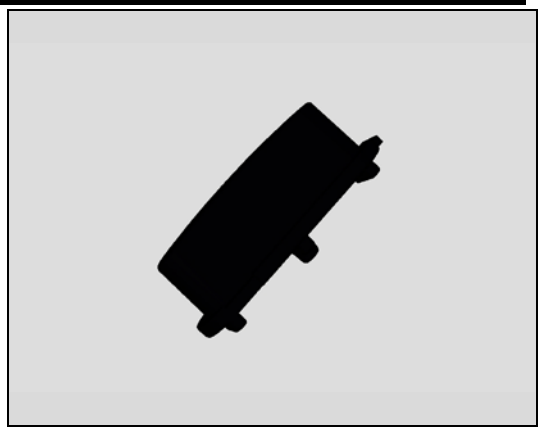

4.22 Camera Key

Follow the 3.1 – 3.10 Disassembly instructions!
Carry out the Removal as described below!
Prepare a new Camera Key!
Carry out the Installation as described below!
Follow the 5.1 - 5.11 Reassembly instructions!

REMOVAL

Pull to remove the Camera Key with fingers

INSTALLATION

Insert a new Camera Key with fingers

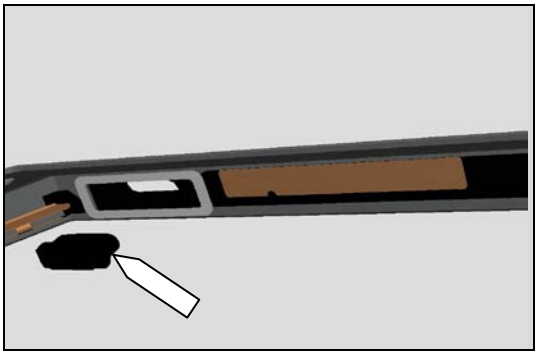

© Sony Mobile Communications AB – Company Internal

4.23 Chat Camera

Follow the 3.1 - 3.7 Disassembly instructions!
Carry out the Removal as described below!
Prepare a new Chat Camera!
Carry out the Installation as described below!
Follow the 5.4 - 5.11 Reassembly instructions!

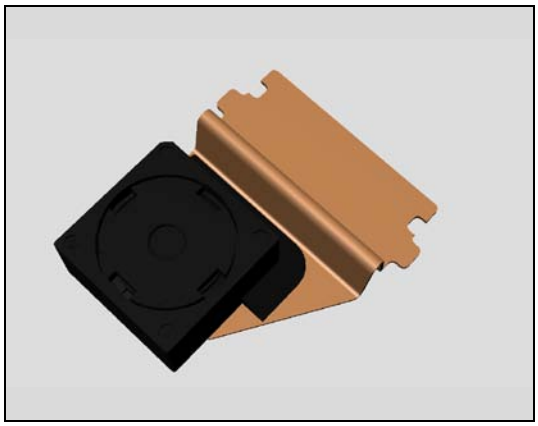

REMOVAL

Open the Zif contact with a Nylon pointer.

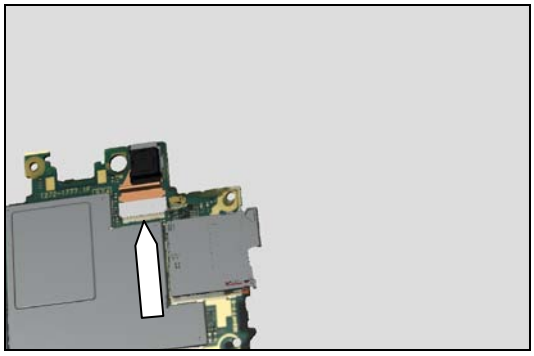

Use the Flex Film Assembly Tool to loosen the Chat Camera flex then use the Front Opening Tool to remove the Chat Camera.

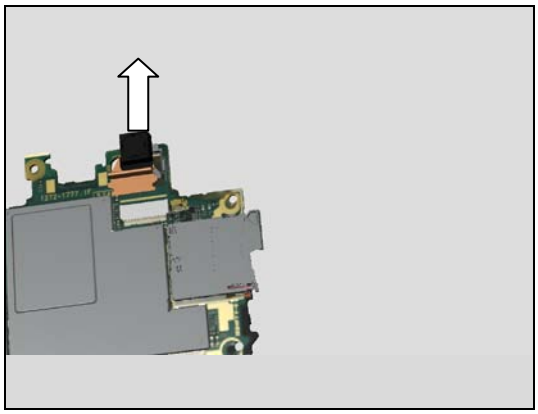

INSTALLATION

Use the Flex Film Assembly Tool and attach the flex to Zif contact. Then use fingers for position the new Chat Camera in the cavity.

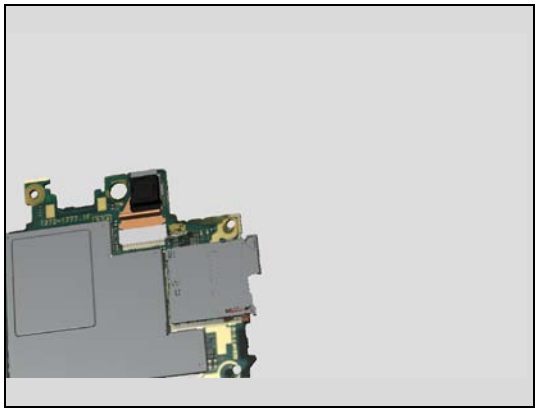

© Sony Mobile Communications AB – Company Internal

Replacement

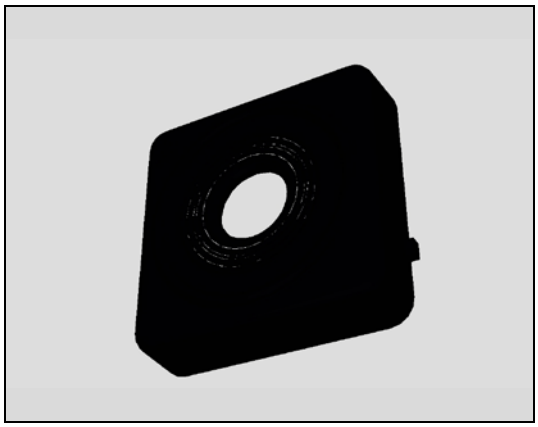

4.24 Chat Camera Holder

Follow the 3.1 - 3.7 Disassembly instructions!
Carry out the Removal as described below!
Prepare a new Chat Camera Holder!
Carry out the Installation as described below!
Follow the 5.4 - 5.11 Reassembly instructions!

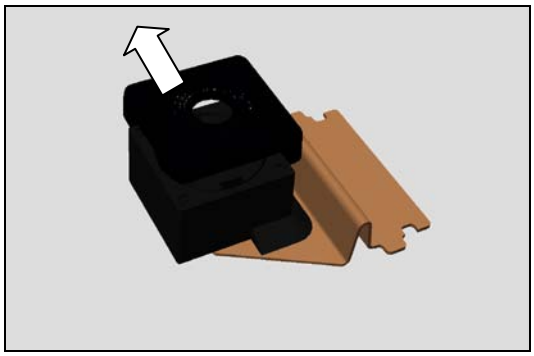

REMOVAL

Remove the Chat Camera Holder with fingers.

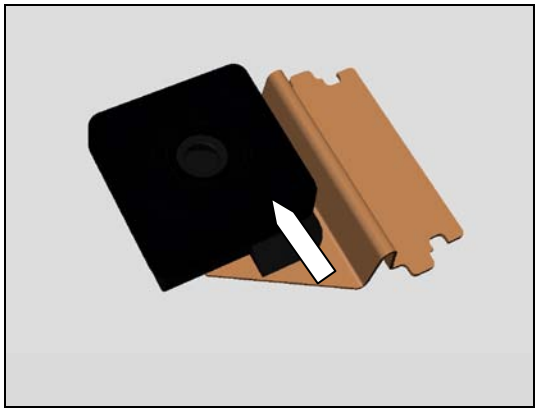

INSTALLATION

Attach a new Chat Camera Holder with fingers.

© Sony Mobile Communications AB – Company Internal

Replacement

4.25 Core Unit Label

Carry out the Removal as described below!
Prepare a new Core Unit Label!
Carry out the Installation as described below!

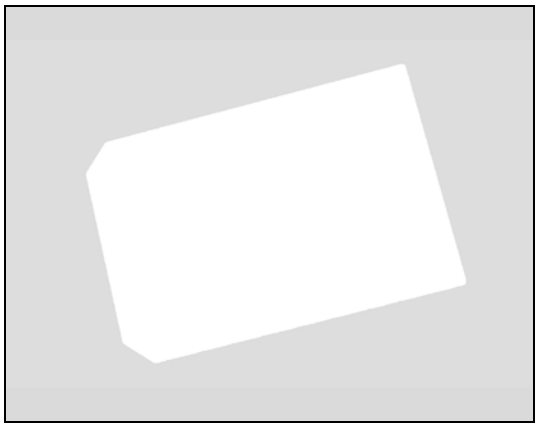

REMOVAL

Open SIM Cap with fingers

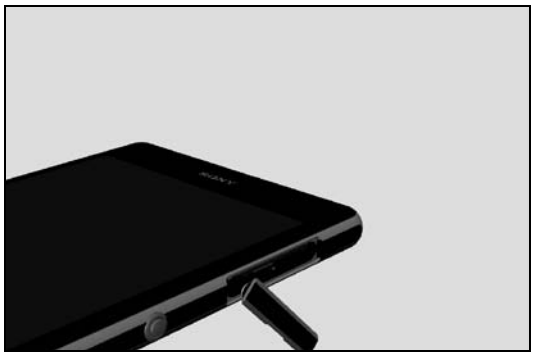

Pull out the Tray Core Unit Label with fingers and remove the label with a Dentist Hook.

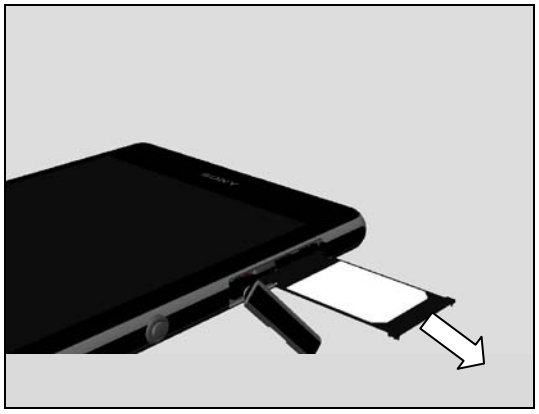

INSTALLATION

Attach a new Core Unit Label with fingers on the Tray Core Unit Label. Close the SIM Cap.

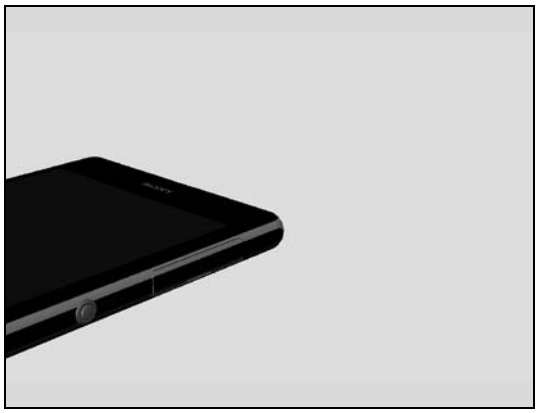

© Sony Mobile Communications AB – Company Internal

Replacement

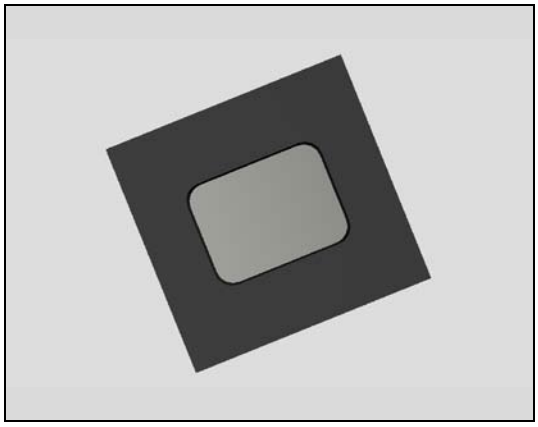

4.26 Cushion 1st Mic

Follow the 3.1 – 3-10 Disassembly instructions!
Carry out the Removal as described below!
Prepare a new Cushion 1st Mic!
Carry out the Installation as described below!
Follow the 5.1 - 5.11 Reassembly instructions!

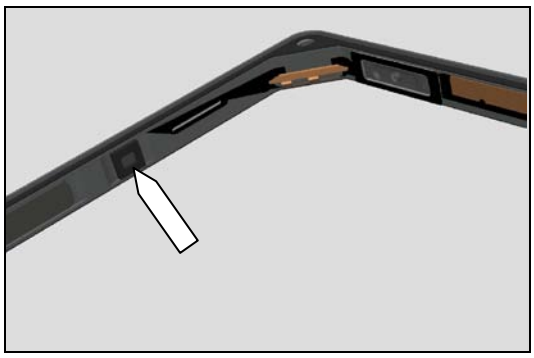

REMOVAL

Remove the Cushion 1st Mic with Dentist Hook.
Scrap! Not to be reused!

INSTALLATION

Attach a new Cushion 1st Mic with the Flex Film Assembly Tool.

© Sony Mobile Communications AB – Company Internal

Replacement

4.27 Cushion 2nd Mic

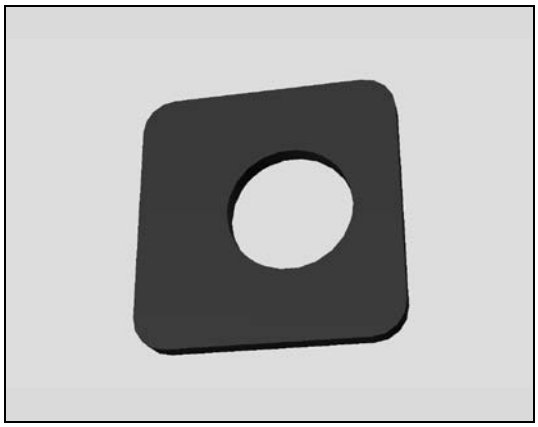

Follow the 3.1 - 3.2 Disassembly instructions!
Follow the 4.31 Removal instructions!
Carry out the Removal as described below!
Prepare a new Cushion 2nd Mic!
Carry out the Installation as described below!
Follow the 4.31 Installation instructions!
Follow the 5.9 - 5.11 Reassembly instructions!

REMOVAL

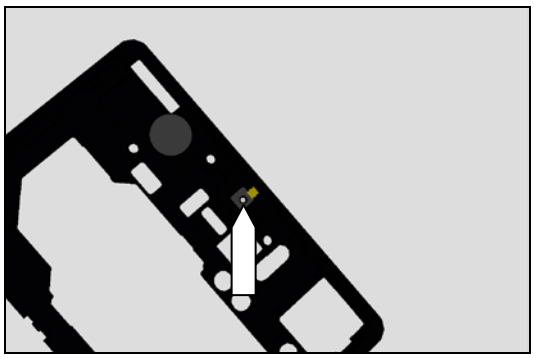

Remove the Cushion 2st Mic with Dentist Hook.
Scrap! Not to be reused!

INSTALLATION

Attach a new Cushion 2st Mic with the Flex Film Assemblv Tool.

© Sony Mobile Communications AB – Company Internal

Replacement

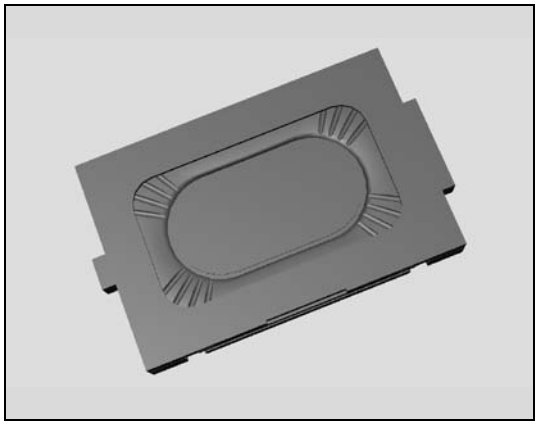

4.28 Ear Speaker

Follow the 3.1 – 3.7 Disassembly instructions!
Follow the 4.11 Removal instructions!
Carry out the Removal as described below!
Prepare a new Ear Speaker!
Carry out the Installation as described below!
Follow the 4.11 Installation instructions!
Follow the 5.4 - 5.11 Reassembly instructions!

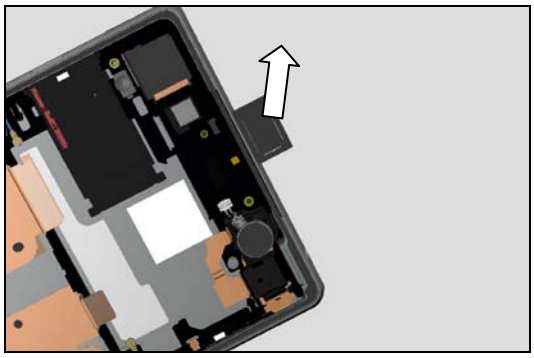

REMOVAL

Remove the Ear Speaker using Front Opening Tool.
Scrap! Not to be reused!

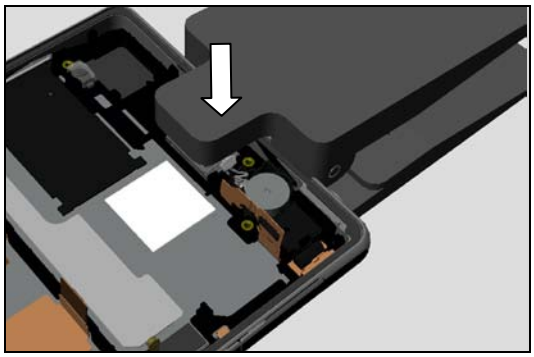

INSTALLATION

Place a new Ear Speaker with fingers
Use Press Tool Earspeaker and press for 10s.

© Sony Mobile Communications AB – Company Internal

Replacement

4.29 FPC Assembly Audio Jack

Follow the 3.1 – 3.10 Disassembly instructions!
Carry out the Removal as described below!
Prepare a new FPC Assembly Audio Jack!
Carry out the Installation as described below!
Follow the 5.1 - 5.11 Reassembly instructions!

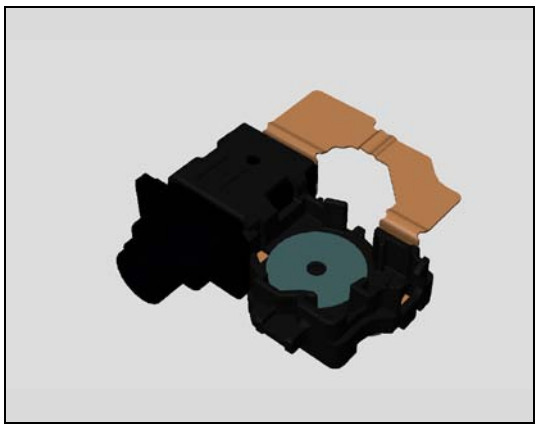

REMOVAL

Detach to remove the FPC Assembly Audio Jack with fingers.

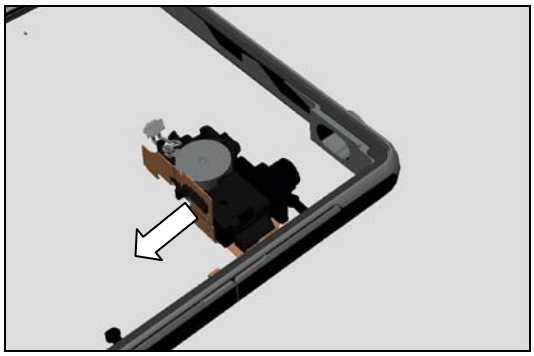

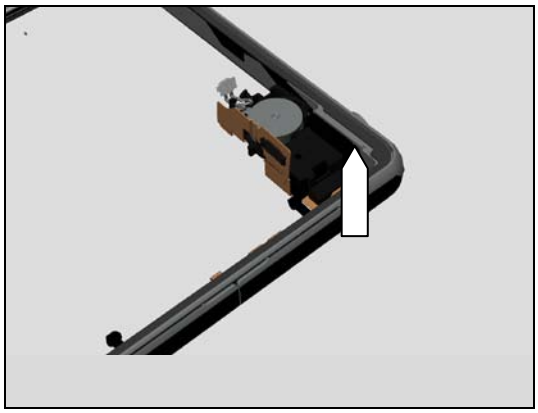

INSTALLATION

Place a new FPC Assembly Audio Jack with fingers.

Use Audio Jack Press and press for 10s.

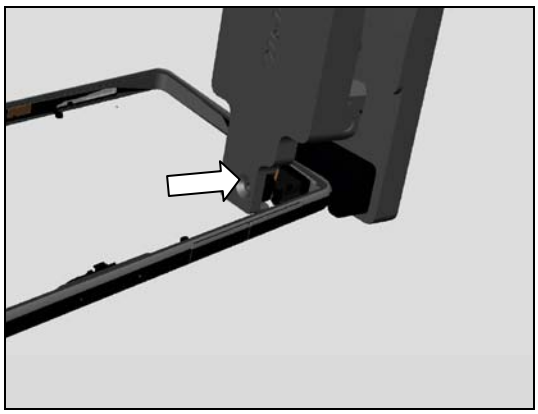

© Sony Mobile Communications AB – Company Internal

4.30 FPC Assembly Charger

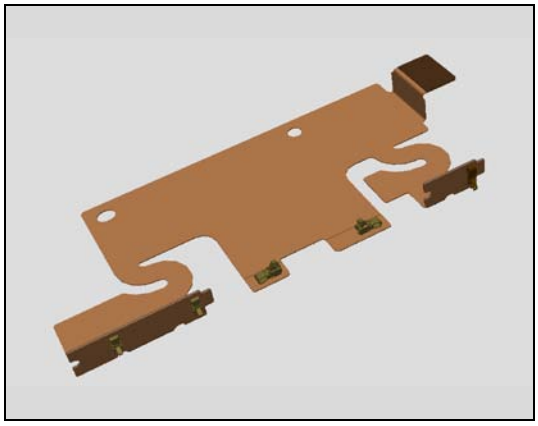

Follow the 3.1 – 3.10 Disassembly instructions!
Follow the 4.46 Removal instructions!
Carry out the Removal as described below!
Prepare a new FPC Assembly Charger!
Carry out the Installation as described below!
Follow the 4.46 Installation instructions!
Follow the 5.1 - 5.11 Reassembly instructions!

REMOVAL

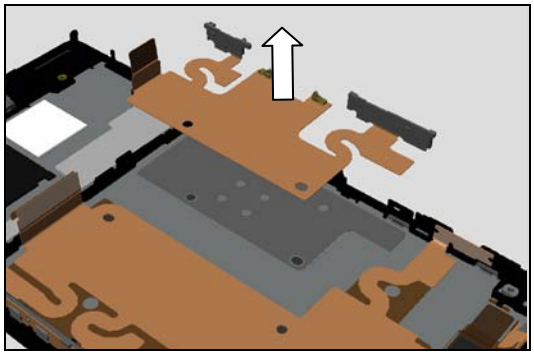

Remove the FPC Assembly Charger with the Flex Film Assembly Tool.
Not! Be very careful because flex could be reused if no damage!

INSTALLATION

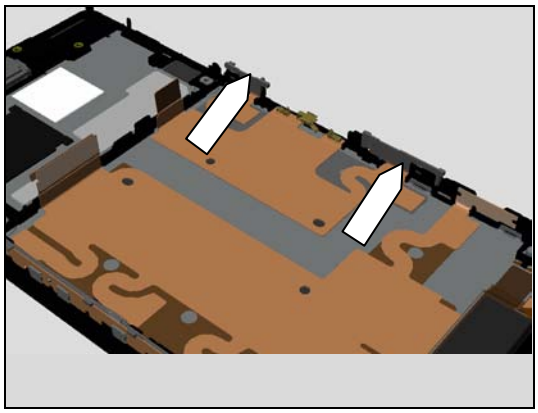

Start by placing the buttons of the new FPC Assembly Charger with a Flex Film Assembly Tool before assembly the flex.

© Sony Mobile Communications AB – Company Internal

4.31 FPC Assembly Mic

Follow the 3.1 – 3.2 Disassembly instructions!
Carry out the Removal as described below!
Prepare a new FPC Assembly Mic!
Carry out the Installation as described below!
Follow the 5.9 - 5.11 Reassembly instructions!

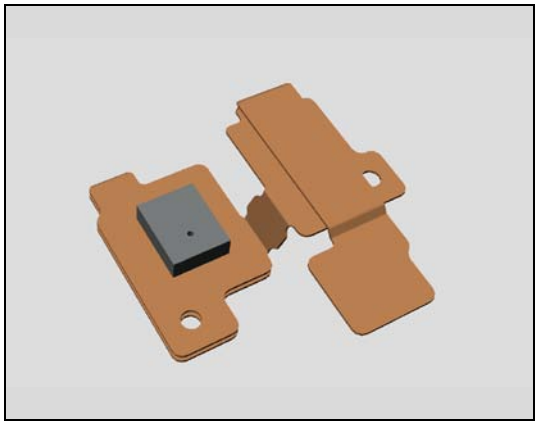

REMOVAL

Detach to remove the FPC Assembly Mic with the Flex Film Assembly Tool and fingers.
Scrap! Not to be reused!

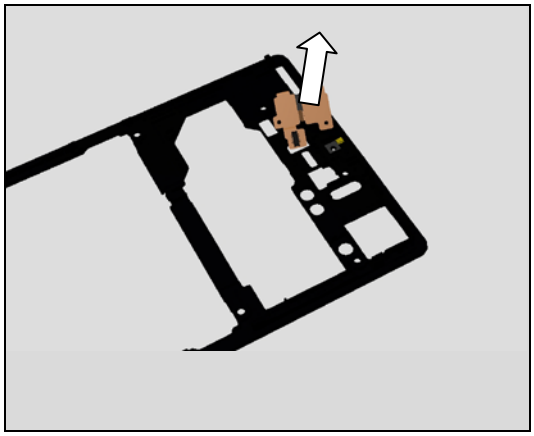

INSTALLATION

Place a new FPC Assembly Mic using a Flex Film Assembly Tool.
Note! Press for 10s to activate the adhesive around microphone

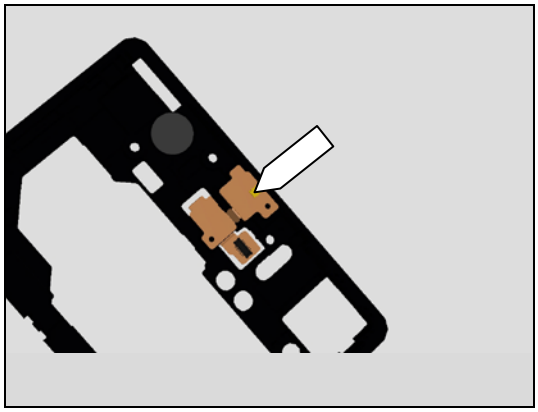

© Sony Mobile Communications AB – Company Internal

4.32 FPC Assembly Relay

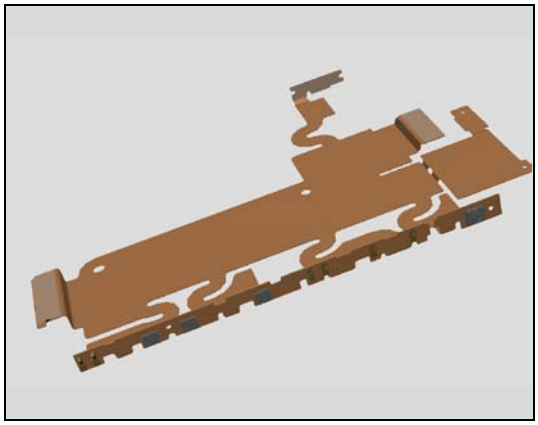

Follow the 3.1-3.10 Disassembly instructions!
Follow the 4.47 Removal instructions!
Carry out the Removal as described below!
Prepare a new FPC Assembly Relay!
Follow the 4.47 Installation instructions!
Carry out the Installation as described below!
Follow the 5.1 - 5.11 Reassembly instructions!

REMOVAL

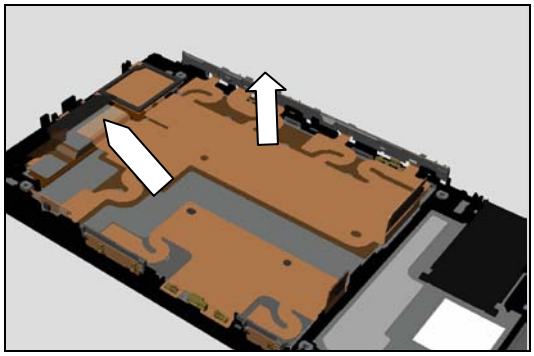

Start by disconnect the BtB connector against Display flex. Then remove the FPC Assembly Relay with the Flex Film Assembly Tool.
Not! Be very careful because flex could be reused if no damage!

INSTALLATION

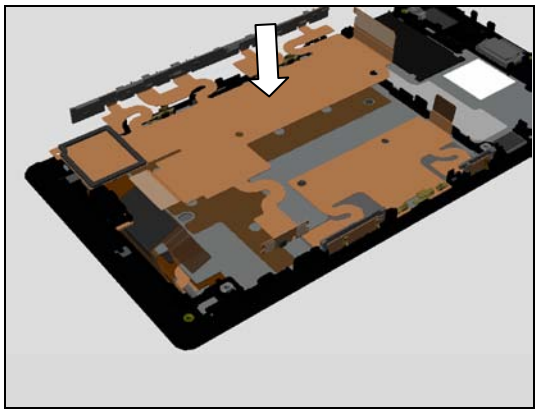

Start by placing the buttons of the new FPC Assembly Relay with a Flex Film Assembly Tool before assembly the flex. Connect BtB connector against Display flex.

© Sony Mobile Communications AB – Company Internal

Replacement

4.33 Front Cover

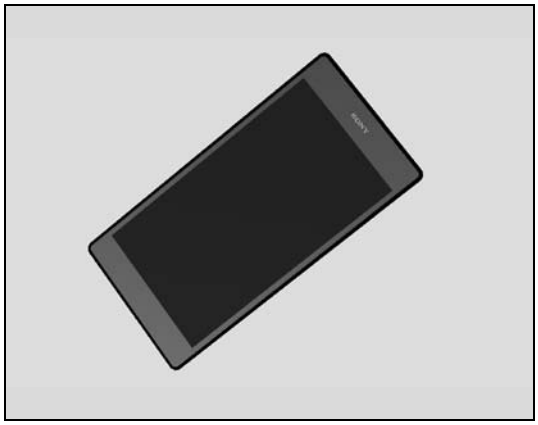

Follow the 3.1 - 3.10 Disassembly instructions!
Follow the 4.22, 4.28, 4.30, 4.32 and 4.54 Removal instructions!
Carry out the Removal as described below!
Prepare a new Front Assembly!
Carry out the Installation as described below!
Follow the 4.22, 4.28, 4.30, 4.32 and 4.54 Installation instructions!
Follow the 5.1 - 5.11 Reassembly instructions!

© Sony Mobile Communications AB – Company Internal

Replacement

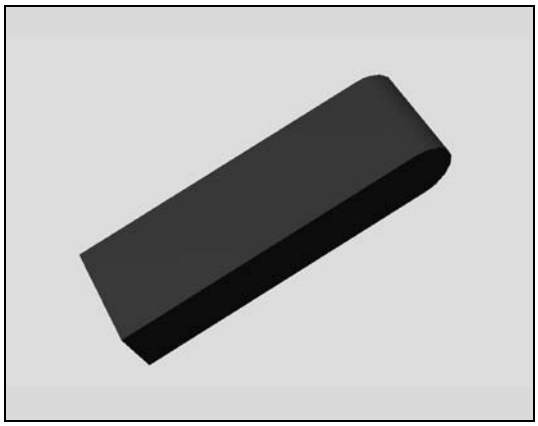

4.34 Gasket Charger

Follow the 3.1- 3.10 Disassembly instructions!
Carry out the Removal as described below!
Prepare a new Gasket Charger!
Carry out the Installation as described below!
Follow the 5.1 - 5.11 Reassembly instructions!

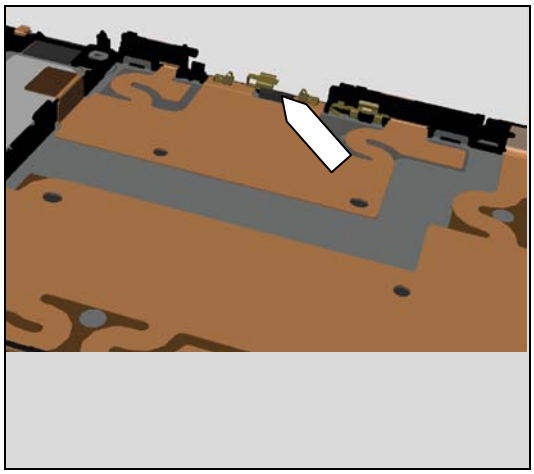

REMOVAL

Detach to remove the Gasket Charger with a Dentist Hook.
Scrap! Not to be reused!

INSTALLATION

Place a new Gasket Charger using a Flex Film Assembly Tool.

© Sony Mobile Communications AB – Company Internal

Replacement

4.35 Gasket Side Key

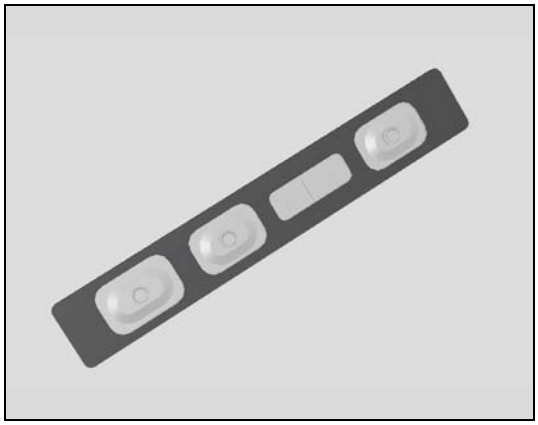

Follow the 3.1- 3.10 Disassembly instructions!
Follow the 4.18 Removal instructions!
Carry out the Removal as described below!
Prepare a new Gasket Side Key!
Carry out the Installation as described below!
Follow the 4.18 Installation instructions!
Follow the 5.1 - 5.11 Reassembly instructions!

REMOVAL

Remove the Gasket Side Key with the Flex Film Assembly Tool.

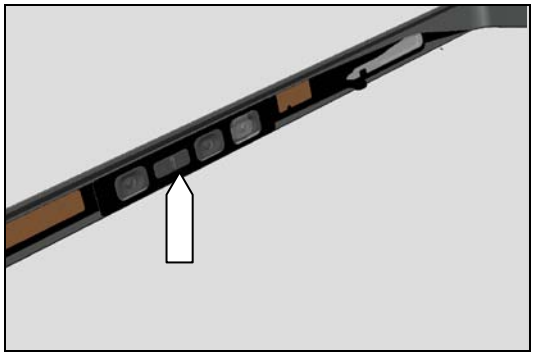

INSTALLATION

Place a new Gasket Side Key using a Flex Film Assembly Tool.

© Sony Mobile Communications AB – Company Internal

Replacement

4.36 Holder Magnetic Charger Connector

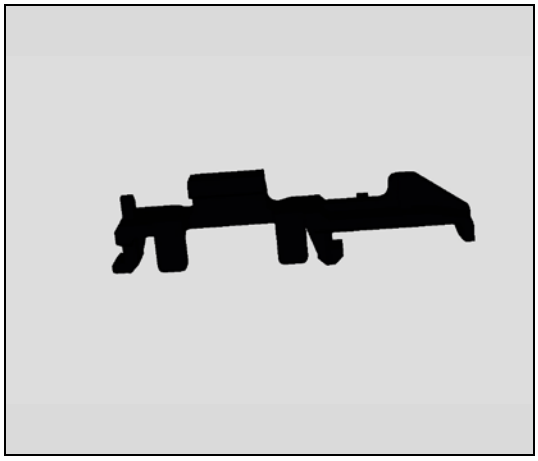

Follow the 3.1 - 3.6 and 3.9 Disassembly instructions!
Carry out the Removal as described below!
Prepare a new Holder Magnetic Charger Connector!
Carry out the Installation as described below!
Follow the 5.2, 5.5 and 5.9-5.11 Reassembly instructions!

REMOVAL

Detach to remove Holder Magnetic Charger Connector with a pair of tweezers.

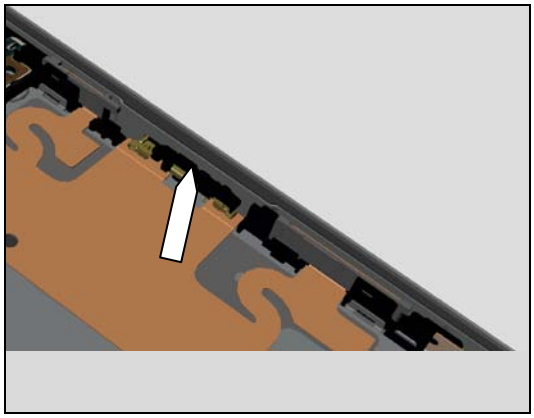

INSTALLATION

Place a new Holder Magnetic Charger Connector using a pair of tweezers.

© Sony Mobile Communications AB – Company Internal

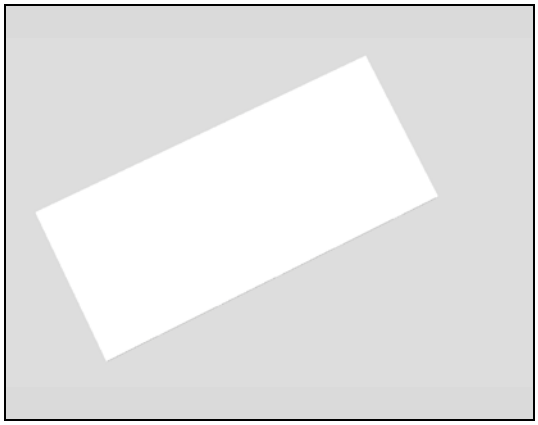

4.37 Liquid indicator

Carry out the Removal as described below!
Prepare a new Liquid indicator!
Carry out the Installation as described below!

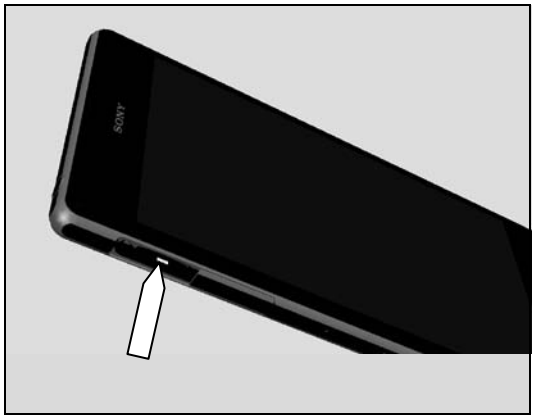

REMOVAL

Detach to remove the Liquid indicator with a Dentist Hook
Scrap! Not to be reused!

INSTALLATION

Place a new Liquid indicator follow the guiding lines on the Rear Cover Assy using a Front Assembly Tool.

© Sony Mobile Communications AB – Company Internal

Replacement

4.38 Loudspeaker

Follow the 3.1 – 3.2, 3.6 and 3.8 Disassembly instructions!
Follow the 4.16 Removal instructions!
Carry out the Removal as described below!
Prepare a new Loudspeaker!
Carry out the Installation as described below!
Follow the 4.16 Installation instructions!
Follow the 5.3, 5.5 and 5.9 - 5.11 Reassembly instructions!

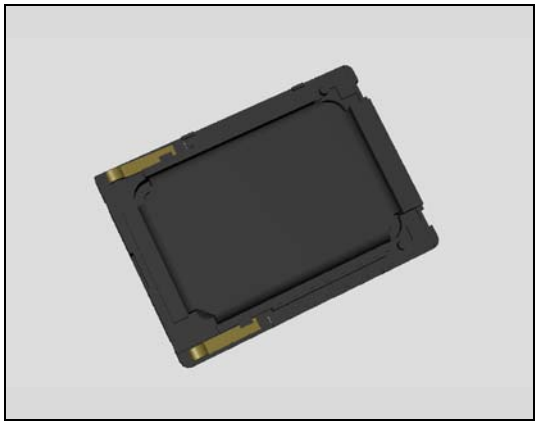

REMOVAL

Detach to remove the Loudspeaker with the Front Opening Tool.
Scrap! Not to be reused!

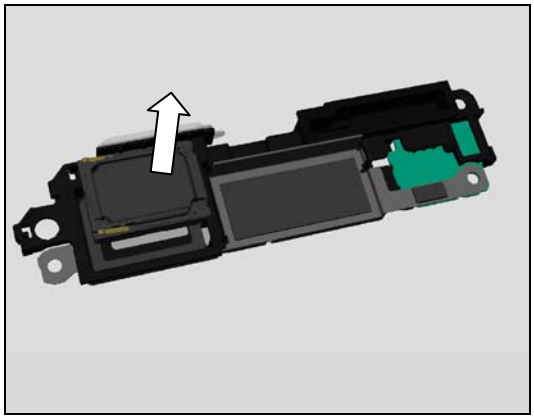

INSTALLATION

Place a new Loudspeaker by using fingers

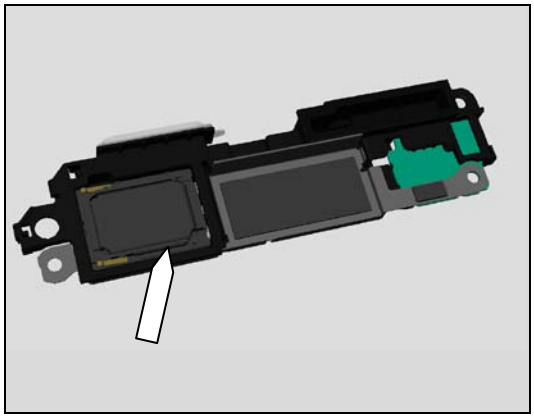

Press to secure its attachment by using Press Tool Loudspeaker for five seconds.
Do not touch the contact pins!

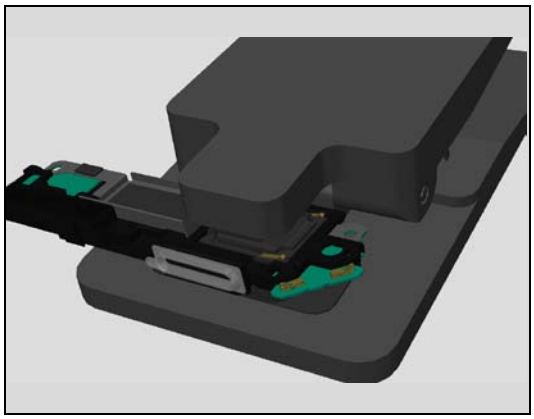

© Sony Mobile Communications AB – Company Internal

Replacement

4.39 Magnetic charger connector

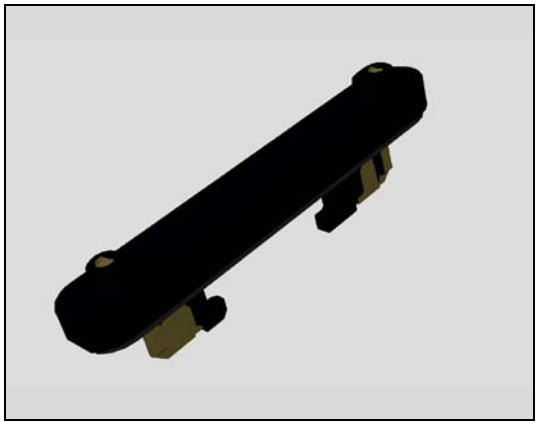

Follow the 3.1 - 3.6 and 3.9 Disassembly instructions!
Follow the 4.36 Removal instructions!
Carry out the Removal as described below!
Prepare a new Magnetic charger connector!
Carry out the Installation as described below!
Follow the 4.36 Installation instructions!
Follow the 5.2, 5.5 and 5.9-5.11 Reassembly instructions!

REMOVAL

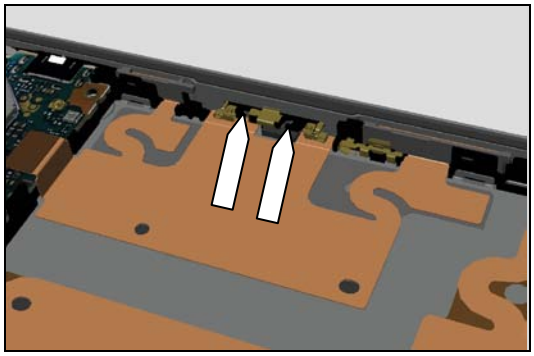

Push the two pads of *Magnetic charger connector by using* Flex Film Assembly Tool.
Scrap! Not to be reused!
Be careful! Do not damage the two pins of FPC charger.

INSTALLATION

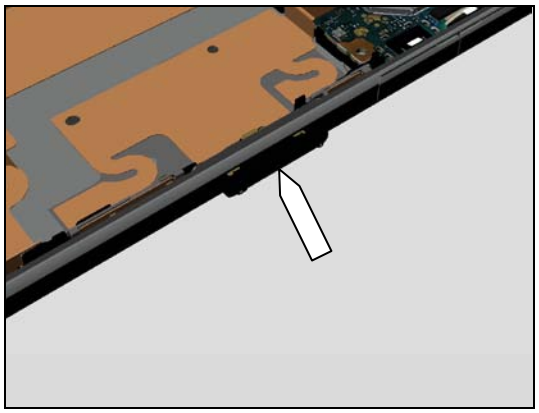

Mount a new Magnetic charger connector by fingers.

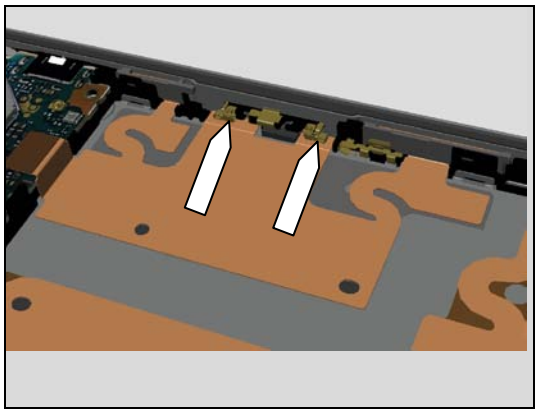

Check and press the two pins into its cavities by using the Front Opening Tool.
Be careful! Do not damage the two pins of FPC charger.

Then use Side Panel press, Side Panel Press Head and Charge connector press pad with the force of 60N for five seconds. According to 1003-9107 Tool Catalogue – mechanical and document Side Panel press Instruction for use.

© Sony Mobile Communications AB – Company Internal

Replacement

4.40 PBA Cellular Sub

Follow the 3.1 – 3.2, 3.6 and 3.8 Disassembly instructions!
Carry out the Removal as described below!
Prepare a new PBA Cellular Sub!
Carry out the Installation as described below!
Follow the 5.3, 5.5 and 5.9 - 5.11 Reassembly instructions!

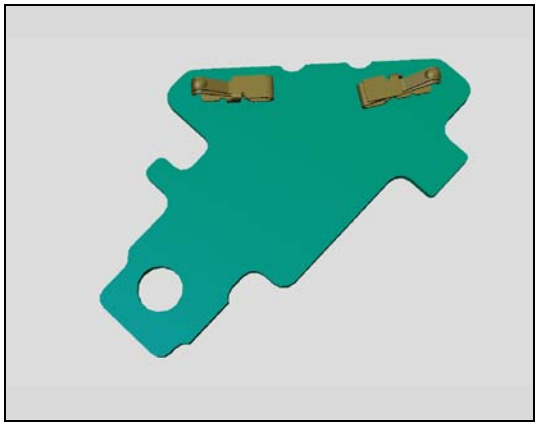

REMOVAL

Remove the PBA Cellular Sub with the Front Opening Tool.

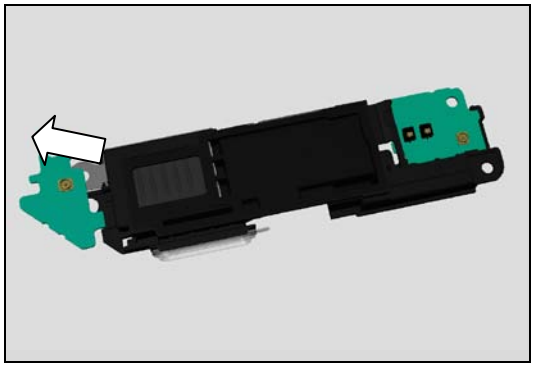

INSTALLATION

Place a new PBA Cellular Sub using fingers in the cavity of Loudspeaker Holder.

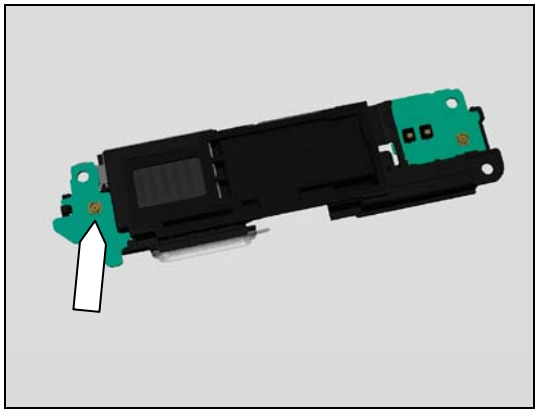

© Sony Mobile Communications AB – Company Internal

Replacement

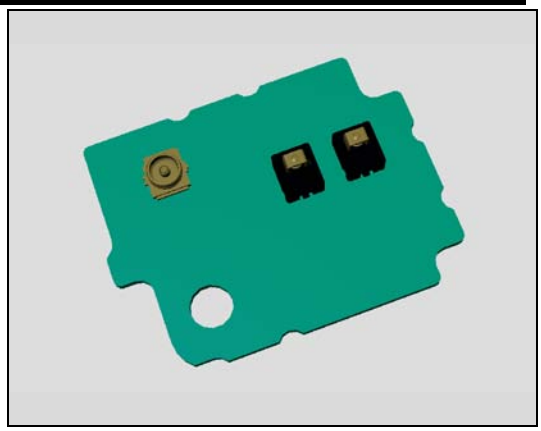

4.41 PBA WLAN Sub

Follow the 3.1 – 3.2, 3.6 and 3.8 Disassembly instructions!
Carry out the Removal as described below!
Prepare a new PBA WLAN Sub!
Carry out the Installation as described below!
Follow the 5.3, 5.5 and 5.9 - 5.11 Reassembly instructions!

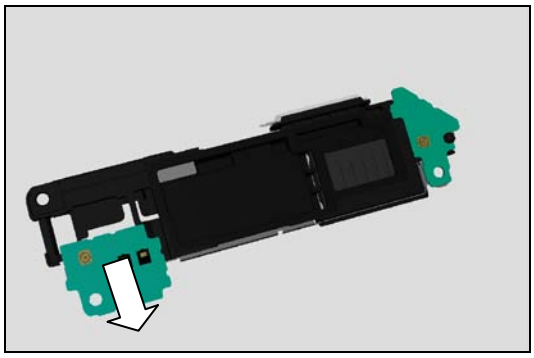

REMOVAL

Remove the PBA WLAN Sub with the Front Opening Tool.

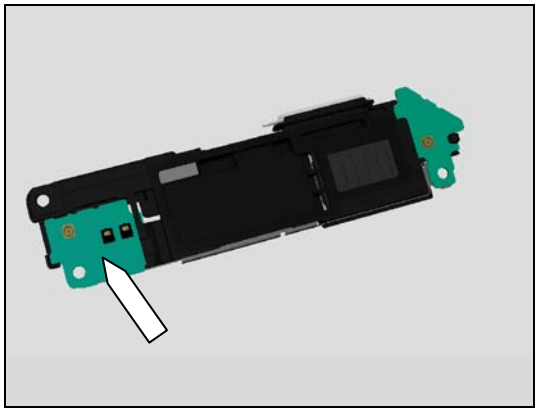

INSTALLATION

Place a new PBA WLAN Sub using fingers in the cavity of Loudspeaker Holder.

© Sony Mobile Communications AB – Company Internal

Replacement

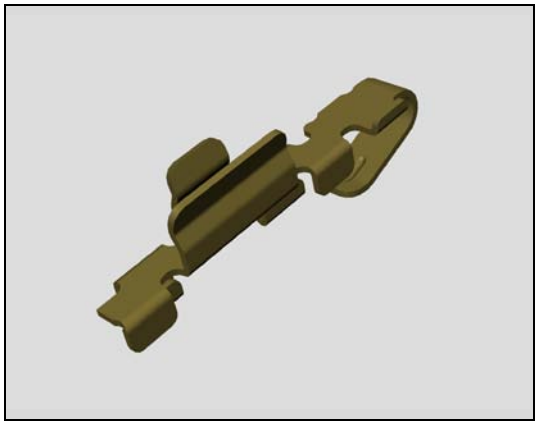

4.42 Plate Contact RF A

Follow the 3.1 - 3.6 and 3.9 Disassembly instructions!
Carry out the Removal as described below!
Prepare a new Holder Magnetic Charger Connector!
Carry out the Installation as described below!
Follow the 5.2, 5.5 and 5.9-5.11 Reassembly instructions!

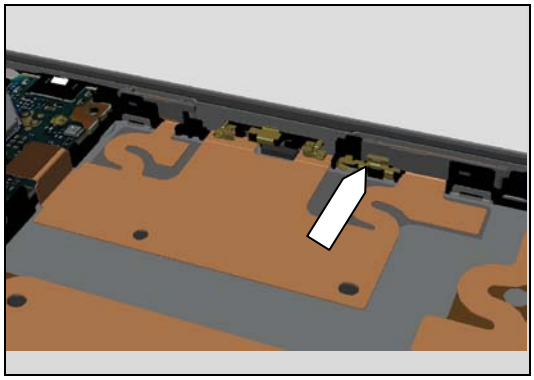

REMOVAL

Detach to remove the Holder Magnetic Charger Connector with a pair of tweezers.

INSTALLATION

Place a new Holder Charger Connector using a pair of tweezers

© Sony Mobile Communications AB – Company Internal

4.43 Power Key

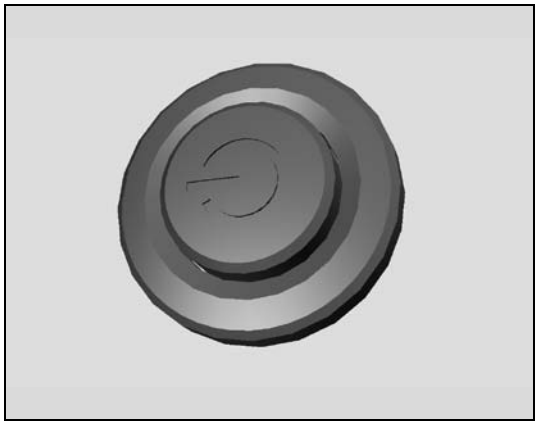

Follow the 3.1 – 3.10 Disassembly instructions!
Follow the 4.35, 4.18 Removal instructions!
Carry out the Removal as described below!
Prepare a new Power Key!
Carry out the Installation as described below!
Follow the 4.18, 4.35 Installation instructions!
Follow the 5.1 - 5.11 Reassembly instructions!

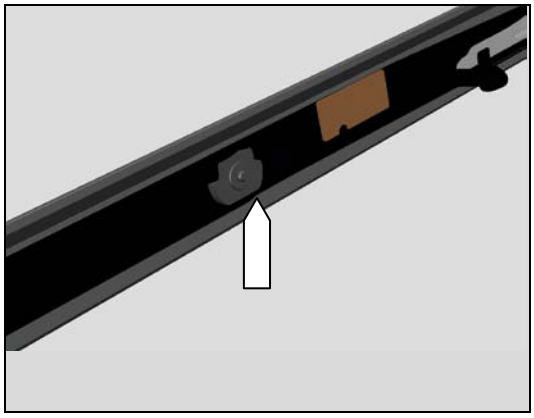

REMOVAL

Pull to remove the Power Key with fingers

INSTALLATION

Insert a new Power Key with fingers

© Sony Mobile Communications AB – Company Internal

Re-Assembly

4.44 RF Cable B

Follow the 3.1 - 3.2, 3.6 and 3.9 Disassembly instructions!
Carry out the Removal as described below!
Prepare a new RF Cable B!
Carry out the Installation as described below!
Follow 5.5 and 5.9-5.11 Reassembly instructions!

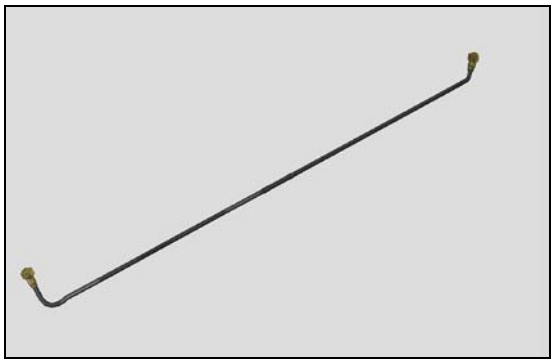

REMOVAL

Release the RF Cable B with the Flex Film Assembly Tool.
Note! Careful not to break the two connectors!

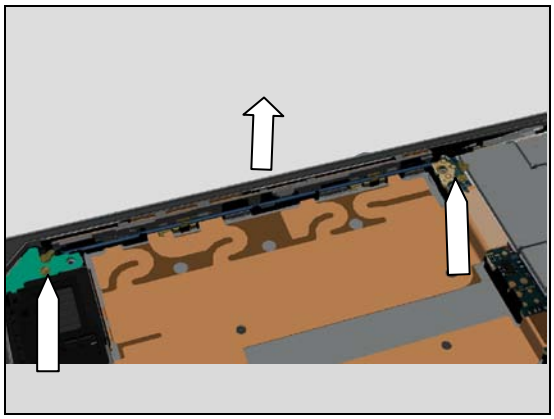

INSTALLATION

Place a new RF Cable B using a Flex Film Assembly Tool.

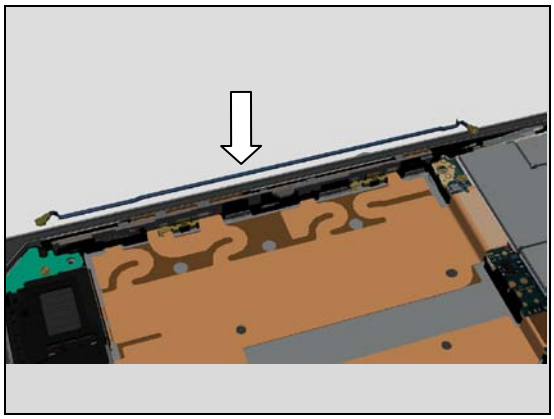

Connect the two connectors with fingers
Note! Important that the silver parts of the RF Cable B is placed in the two sockets.

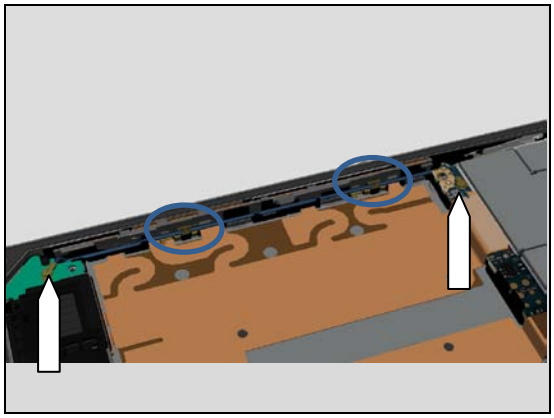

© Sony Mobile Communications AB – Company Internal

Replacement

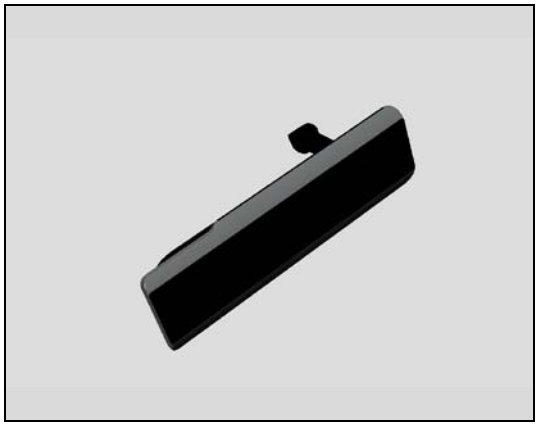

4.45 SD Cap

Carry out the Removal as described below!
Prepare a new SD Cap!
Carry out the Installation as described below!

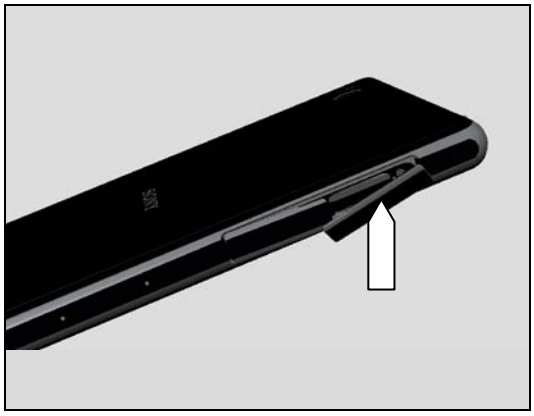

REMOVAL

Detach to remove the SD Cap with fingers

INSTALLATION

Place a new SD Cap with fingers and a pair of tweezers

© Sony Mobile Communications AB – Company Internal

Replacement

4.46 Sheet Conductive Charger FPC

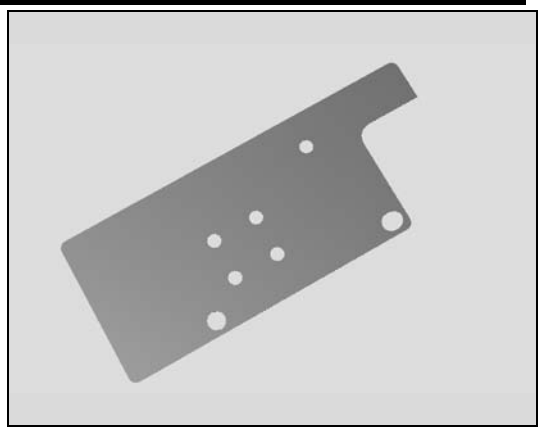

Follow the 3.1-3.10 Disassembly instructions!
Follow the 4.30 Removal instructions!
Carry out the Removal as described below!
Prepare a new Sheet Conductive Charger FPC!
Follow the 4.30 Installation instructions!
Carry out the Installation as described below!
Follow the 5.1 - 5.11 Reassembly instructions!

REMOVAL

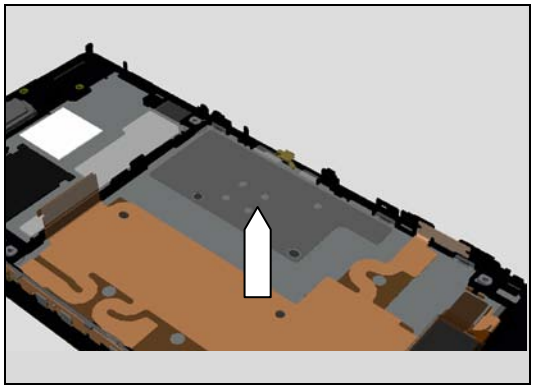

Detach to remove the Sheet Conductive Charger FPC with Nylon Pointer.
Scrap! Not to be reused!

INSTALLATION

Place a new Sheet Conductive Charger FPC using a Flex Film Assembly Tool.

© Sony Mobile Communications AB – Company Internal

Replacement

4.47 Sheet Conductive Relay FPC

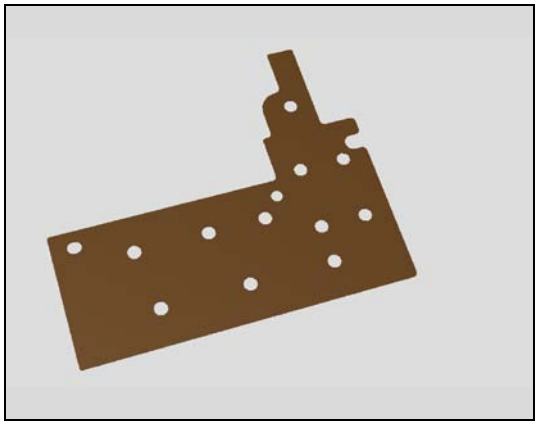

Follow the 3.1-3.10 Disassembly instructions!
Follow the 4.32 Removal instructions!
Carry out the Removal as described below!
Prepare a new Sheet Conductive Relay FPC!
Follow the 4.32 Installation instructions!
Carry out the Installation as described below!
Follow the 5.1 - 5.11 Reassembly instructions!

REMOVAL

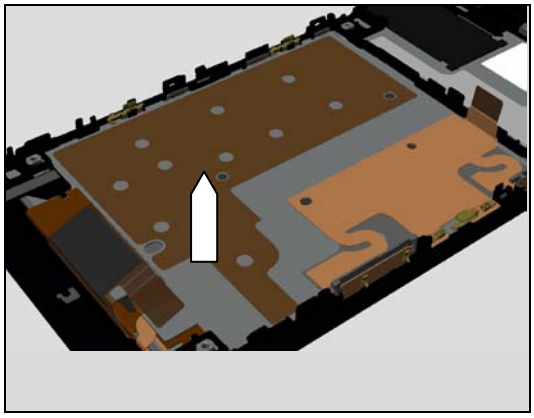

Detach to remove the Sheet Conductive Charger FPC with Nylon Pointer.
Scrap! Not to be reused!

INSTALLATION

Place a new Sheet Conductive Charger FPC using a Flex Film Assembly Tool.

© Sony Mobile Communications AB – Company Internal

Replacement

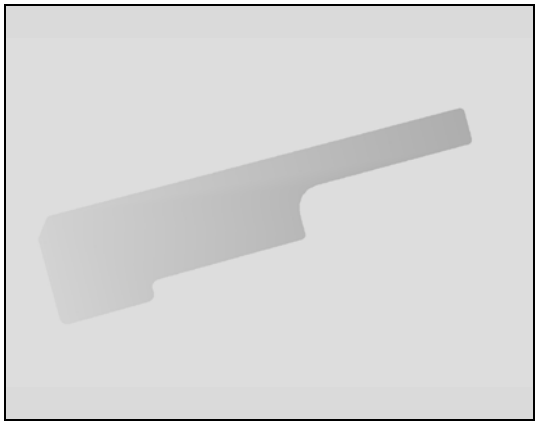

4.48 Sheet Thermal A

Follow the 3.1-3.7 Disassembly instructions!
Carry out the Removal as described below!
Prepare a new Sheet Thermal A!
Carry out the Installation as described below!
Follow the 5.4 - 5.11 Reassembly instructions!

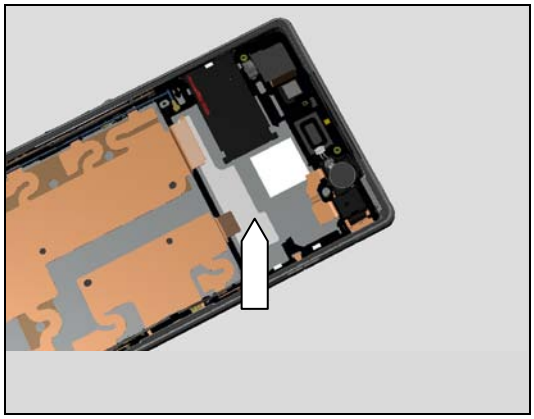

REMOVAL

Detach to remove the Sheet Thermal A with Dentist Hook.
Scrap! Not to be reused!

INSTALLATION

Place a new Sheet Thermal A using a Flex Film Assembly Tool

© Sony Mobile Communications AB – Company Internal

Replacement

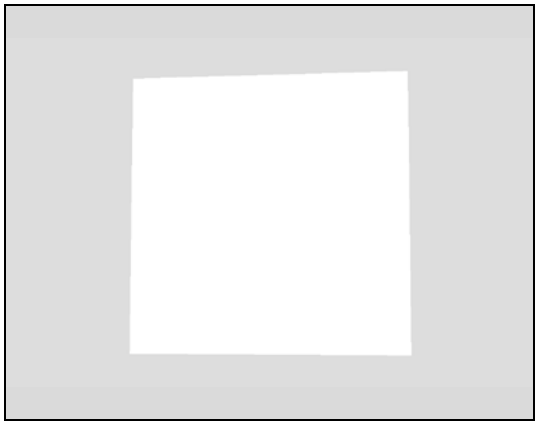

4.49 Sheet Thermal B

Follow the 3.1-3.7 Disassembly instructions!
Carry out the Removal as described below!
Prepare a new Sheet Thermal B!
Carry out the Installation as described below!
Follow the 5.4 - 5.11 Reassembly instructions!

REMOVAL

Detach to remove the Sheet Thermal B with Dentist Hook.
Scrap! Not to be reused!

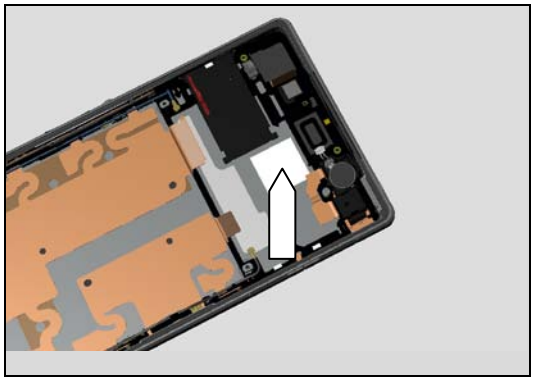

INSTALLATION

Place a new Sheet Thermal B using a Flex Film Assembly Tool

© Sony Mobile Communications AB – Company Internal

Replacement

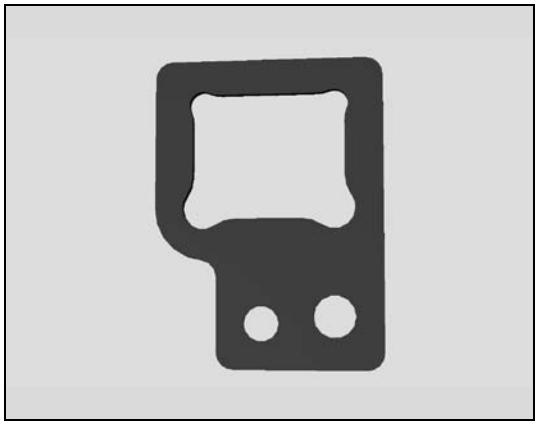

4.50 Sheet WP 2nd Mic

Follow the 3.1 Disassembly instructions!
Carry out the Removal as described below!
Prepare a new Sheet WP 2nd Mic!
Carry out the Installation as described below!
Follow the 5.10 - 5.11 Reassembly instructions!

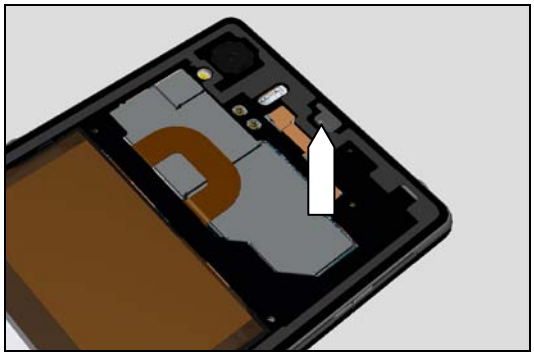

REMOVAL

Detach to remove the Sheet WP 2nd Mic with Dentist Hook.
Scrap! Not to be reused!

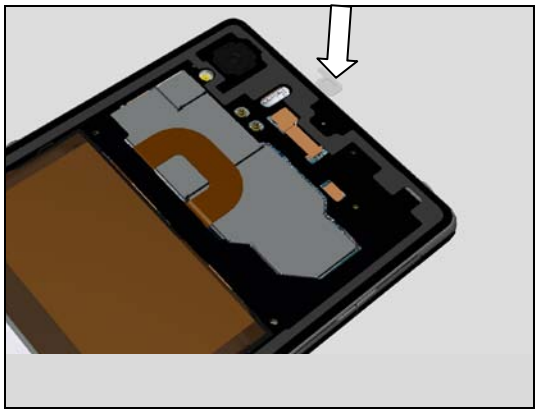

INSTALLATION

Place a new Sheet WP 2nd Mic using a Flex Film Assembly Tool

© Sony Mobile Communications AB – Company Internal

Replacement

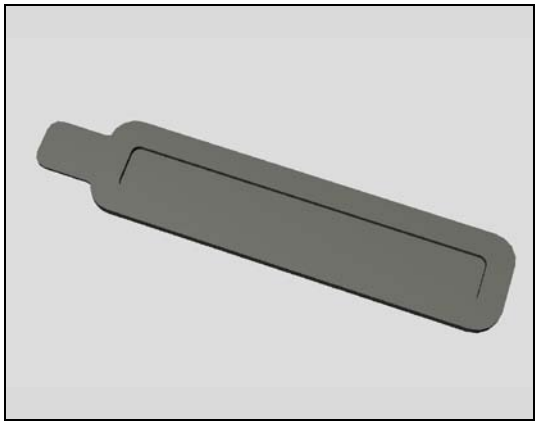

4.51 Sheet WP Check

Follow the 3.1-3.10 Disassembly instructions!
Carry out the Removal as described below!
Prepare a new Sheet WP Check!
Carry out the Installation as described below!
Follow the 5.1 - 5.11 Reassembly instructions!

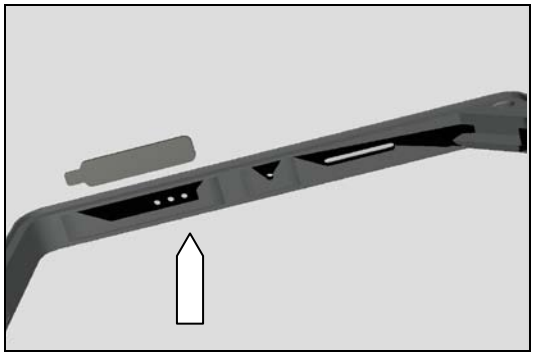

REMOVAL

Detach to remove the Sheet WP Check with Dentist Hook.
Scrap! Not to be reused!

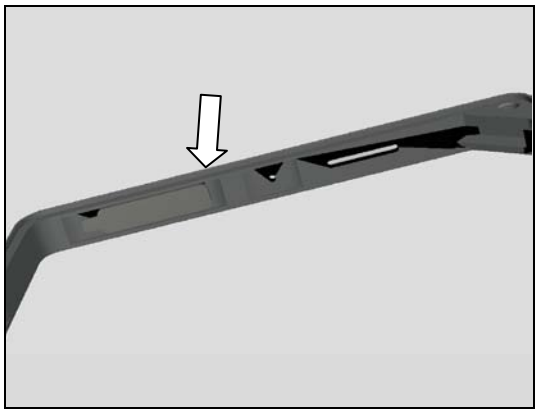

INSTALLATION

Place a new Sheet WP Check using a Flex Film Assembly Tool

© Sony Mobile Communications AB – Company Internal

Replacement

4.52 SIM Cap

Carry out the Removal as described below!
Prepare a new SIM Cap!
Carry out the Installation as described below!

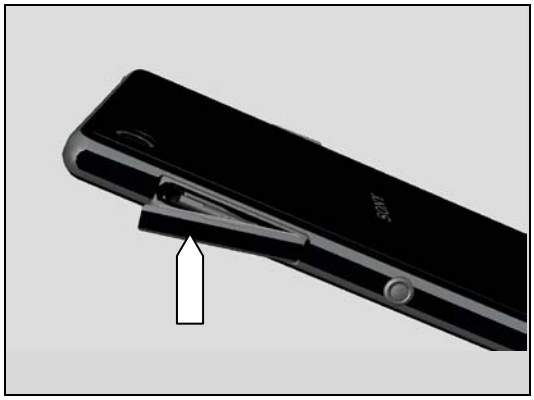

REMOVAL

Detach to remove the SIM Cap with fingers

INSTALLATION

Place a new SIM Cap with fingers and a pair of tweezers

© Sony Mobile Communications AB – Company Internal

Replacement

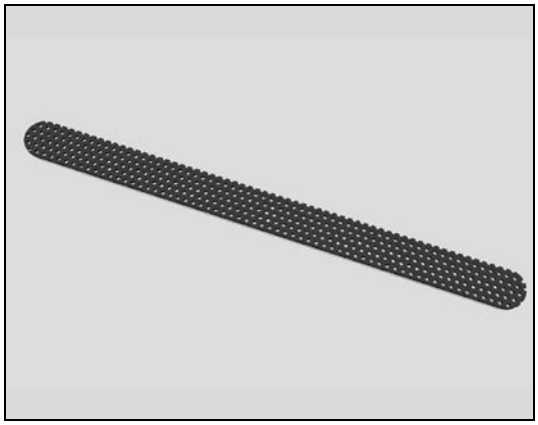

4.53 Speaker Panel

Carry out the Removal as described below!
Prepare a new Speaker Panel!
Carry out the Installation as described below!

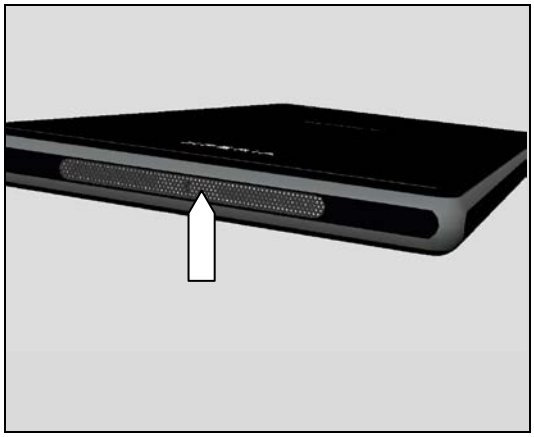

REMOVAL

Detach to remove the Speaker Panel with the Dentist Hook...
Scrap! Not to be reused!

INSTALLATION

Place a new Speaker Panel with fingers and press for 10 sec over the panel.

© Sony Mobile Communications AB – Company Internal

4.54 Tray Core Unit Label

Follow the 3.1-3.7 Disassembly instructions!
Follow the 4.25 Removal instructions!
Carry out the Removal as described below!
Prepare a new Tray Core Unit Label!
Carry out the Installation as described below!
Follow the 4.25 Installation instructions!
Follow the 5.4 - 5.11 Reassembly instructions!

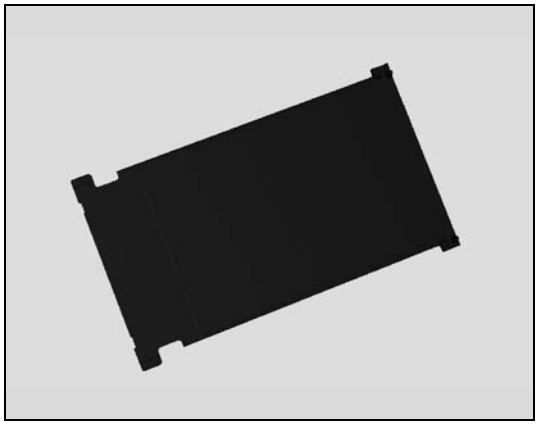

REMOVAL

Open the SIM Cap with fingers. Pull out the Tray Core Unit Label with fingers and lift up the Tray Core Unit Label around the arrows before releasing it.

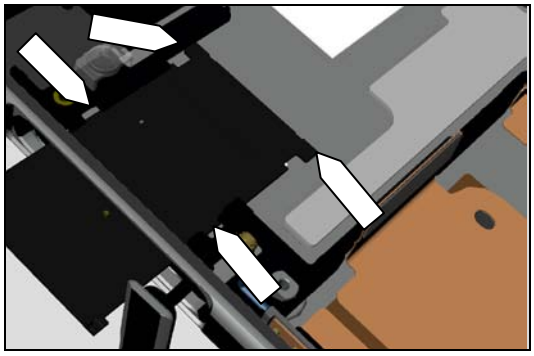

INSTALLATION

Place a new Tray Core Unit Label and put it in the cavity.

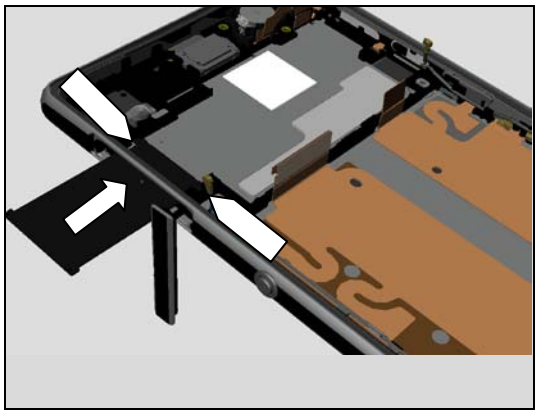

Close the SIM Cap.

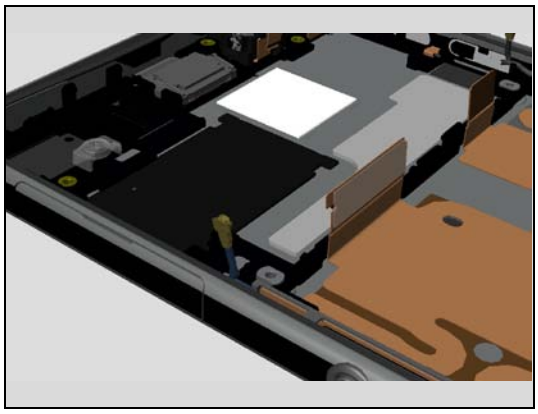

© Sony Mobile Communications AB – Company Internal

Replacement

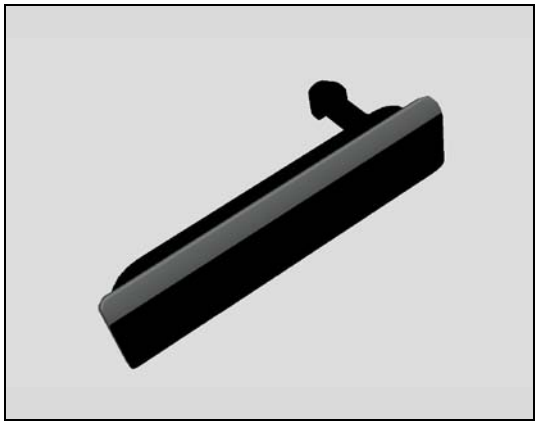

4.55 USB Cap

Carry out the Removal as described below!
Prepare a new USB Cap!
Carry out the Installation as described below!

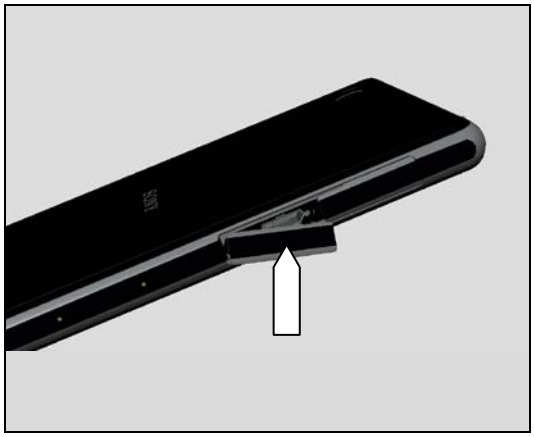

REMOVAL

Detach to remove the USB Cap with fingers

INSTALLATION

Place a new USB Cap with fingers and a pair of tweezers

© Sony Mobile Communications AB – Company Internal

Replacement

4.56 USB Holder

Follow the 3.1-3.7 Disassembly instructions!
Carry out the Removal as described below!
Prepare a new USB Holder!
Carry out the Installation as described below!
Follow the 5.4 - 5.11 Reassembly instructions!

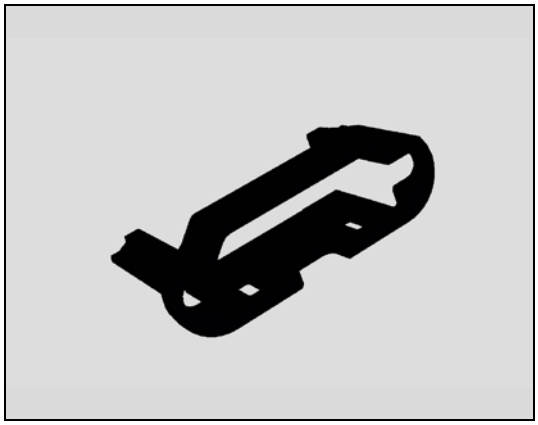

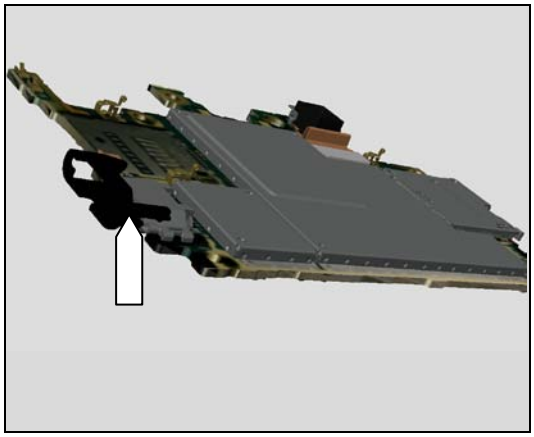

REMOVAL

Detach to remove the USB Holder with fingers

INSTALLATION

Place a new USB Holder with fingers.

© Sony Mobile Communications AB – Company Internal

Replacement

4.57 Vibrator

Follow the 3.1 - 3.2 Disassembly instructions!
Carry out the Removal as described below!
Prepare a new Vibrator!
Carry out the Installation as described below!
Follow the 5.9 - 5.11 Reassembly instructions!

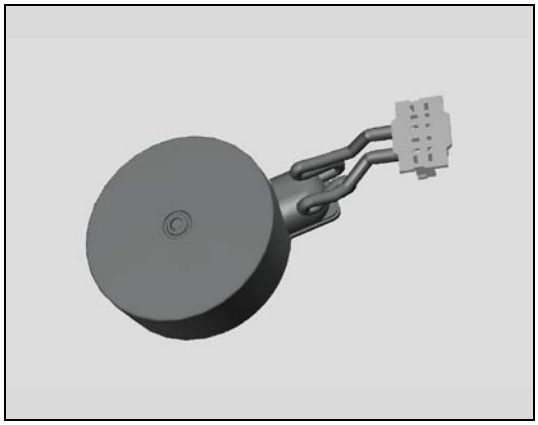

REMOVAL

Disconnect the connector of Vibrator by using a Front Opening Tool.

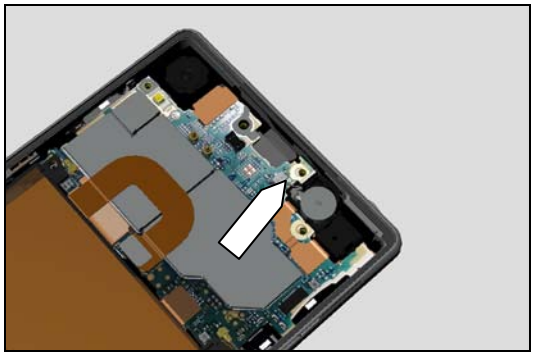

Detach to remove the Vibrator with Front Opening Tool

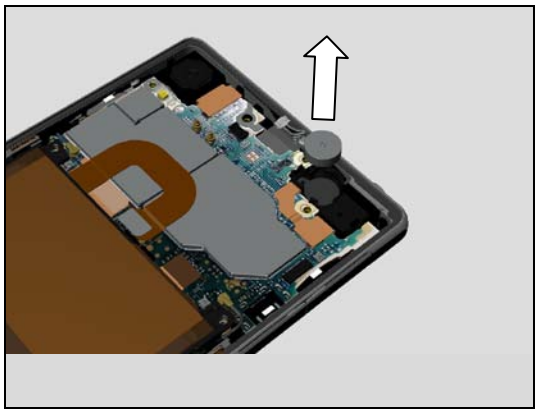

INSTALLATION

Place a new Vibrator into the cavity using fingers and connect to Main PBA

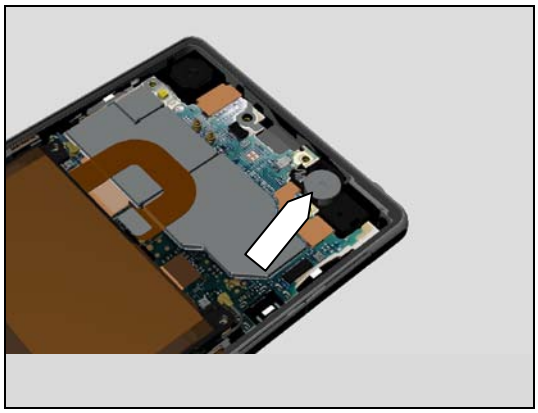

© Sony Mobile Communications AB – Company Internal

Replacement

4.58 Volume Key

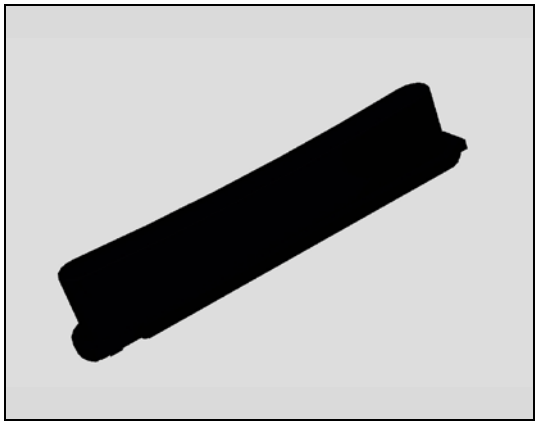

Follow the 3.1-3.10 Disassembly instructions!
Follow the 4.35 and 4.18 Removal instructions!
Carry out the Removal as described below!
Prepare a new Volume Key!
Carry out the Installation as described below!
Follow the 4.18 and 4.35 Installation instructions!
Follow the 5.1 - 5.11 Reassembly instructions!

REMOVAL

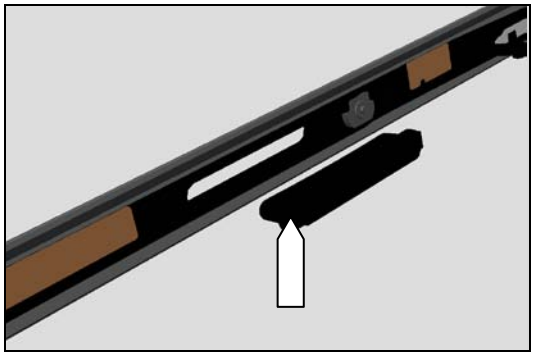

Pull to remove the Volume Key with fingers

INSTALLATION

Insert a new Volume Key with fingers

© Sony Mobile Communications AB – Company Internal

Replacement

4.59 Board Swap - Replacement

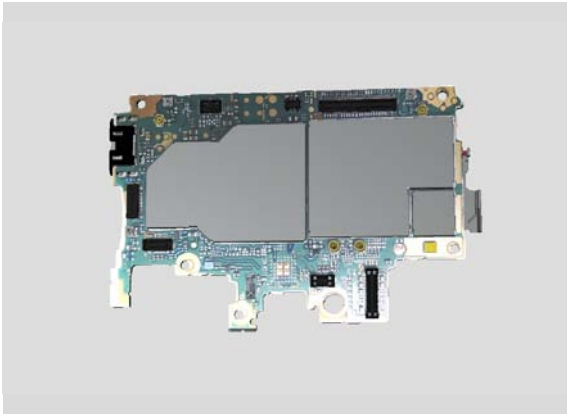

Follow the 3.1 to 3.7 Disassembly instructions!
Follow the 4.23 and 4.56 Removal instructions!
Reuse the Camera, Chat Camera and Battery!
Replace the Swap Board.

Follow the 4.23 and 4.56 Installation instructions!
Follow the 5.4 to 5.11 Reassembly instructions!
Press the Key On/Off to power on the phone, place unit on flat desk and wait 4 minutes until system boot up has been completed.
Please DO NOT move the phone during starting up until "Select Language" menu is shown on the display!
After "Select Language" menu, turn off the phone.
Follow the Calibration chapter 3.1 and 3.2 in 1277-9815
Test Instruction – mechanical

© Sony Mobile Communications AB – Company Internal

5 Re-Assembly

C6902, C6903, C6906, L39h

The Re-assembly is done to the following modules:

1. Front Cover (a) and Main Frame Assy (b)
2. RF Cable A
3. Loudspeaker Holder
4. Main PBA
5. Battery
6. SIM Tray
7. Shield Camera
8. Camera
9. Rear Cover Assy
10. Sheet Battery
11. Window Back

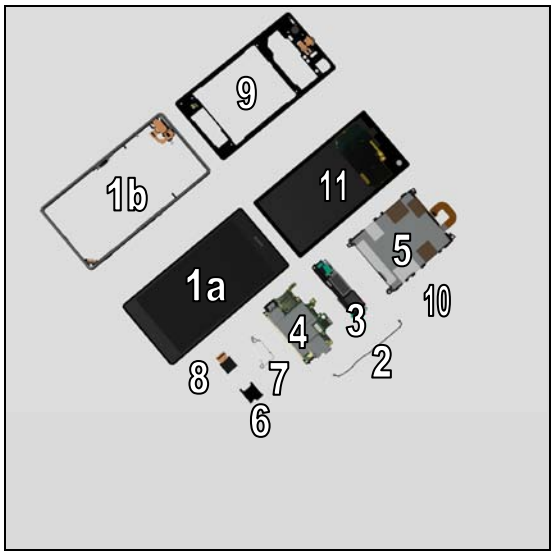

5.1 Front Cover and Main Frame Assy

Follow the 4.17 removal and installation instruction to replace a new Adhesive WP Main Frame Assy

Place the Front Cover on the Main Frame Assy

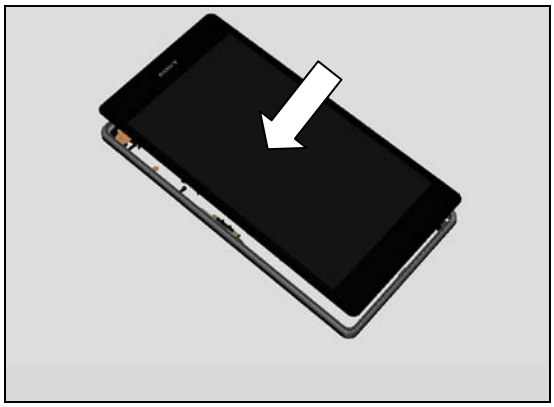

Press with fingers to secure the contact of adhesive between Front Cover and Main Frame Assy

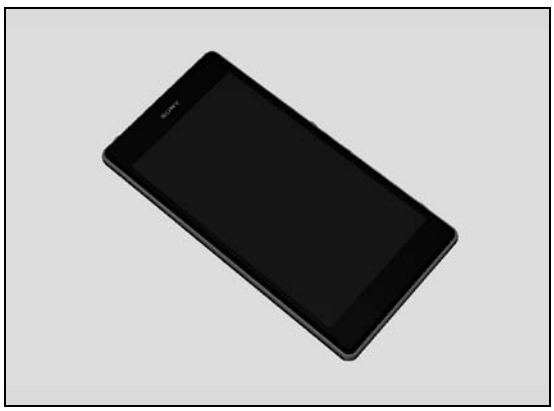

© Sony Mobile Communications AB – Company Internal

Re-Assembly

5.2 RF Cable A

Place the RF Cable A to the Main Frame Assy

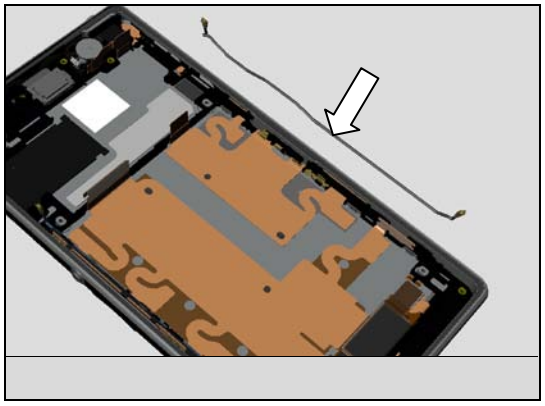

Place a new Cable RF Cable A using a Flex Film Assembly Tool.

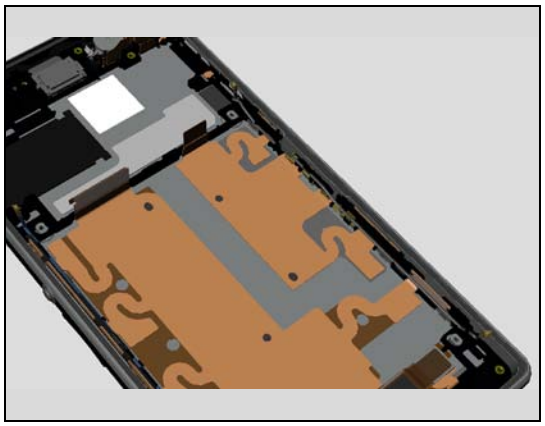

Note! Important that the silver parts of the RF Cable A is placed in the three sockets.

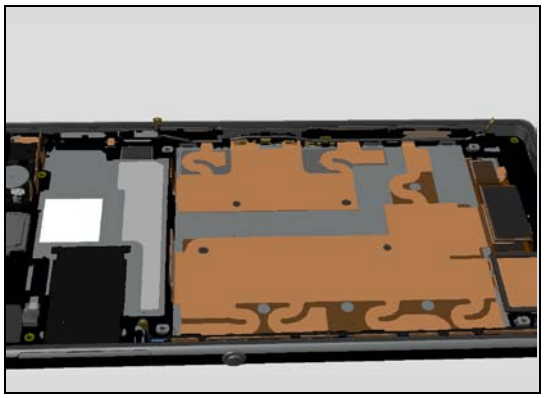

5.3 Loudspeaker Holder

Place the Loudspeaker Holder to Main Frame Assy

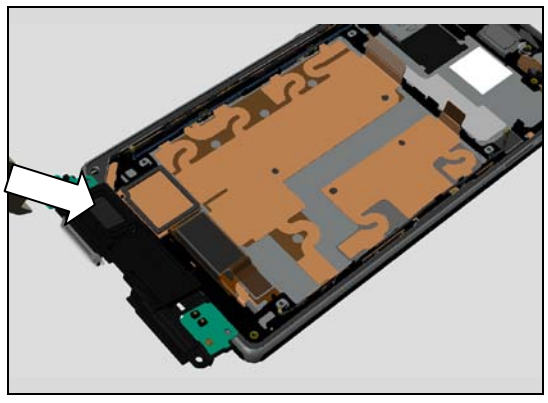

© Sony Mobile Communications AB – Company Internal

Re-Assembly

Use fingers to secure the position of Loudspeaker Holder

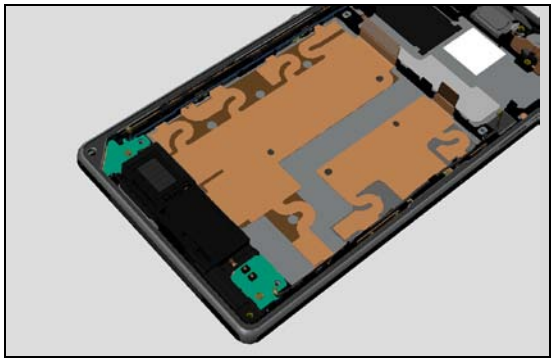

Use fingers to secure positions of RF Cable A and RF Cable B

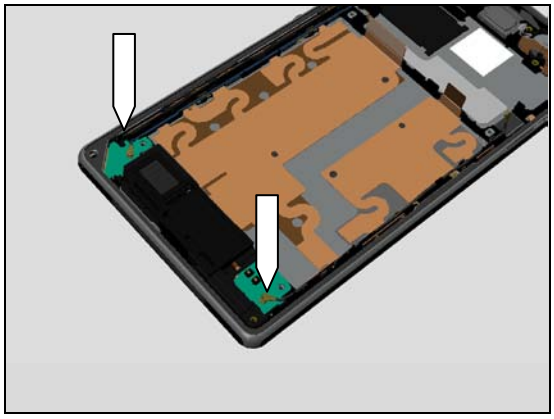

5.4 Main PBA

Place the Main PBA gently into the cavity

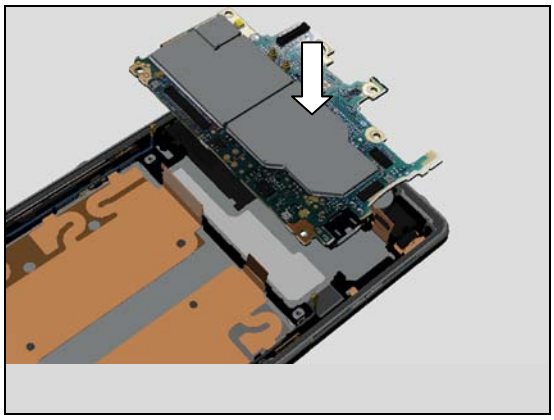

Use fingers to secure position of Main PBA

© Sony Mobile Communications AB – Company Internal

Re-Assembly

Press with fingers to secure the position of BtB conectors, RF Cable A and RF Cable B

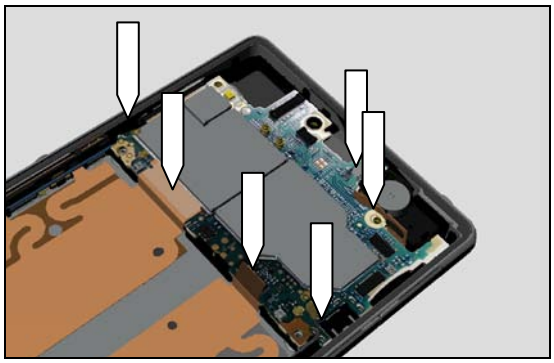

5.5 Battery

Place the Battery gently into the cavity

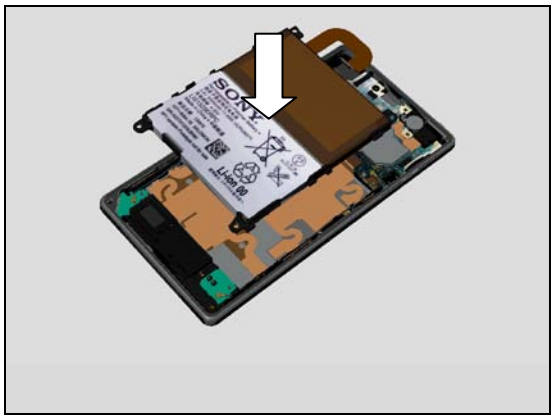

Use fingers to secure the position of the Battery

5.6 SIM Tray

Open SIM Cap.

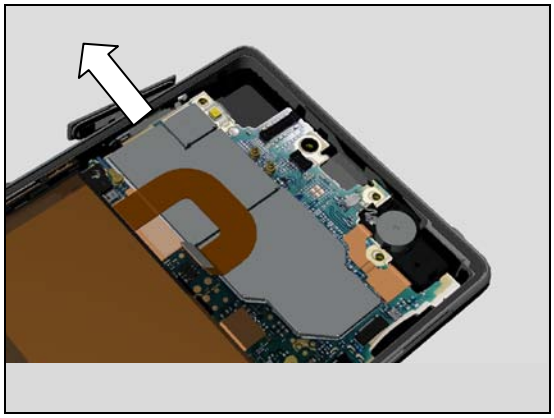

© Sony Mobile Communications AB – Company Internal

Re-Assembly

Use with fingers to secure the SIM Tray then close SIM Cap

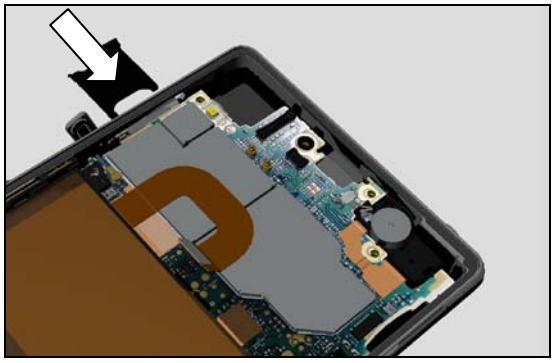

5.7 Shield Camera

Use a pair of tweezers to position Shield Camera into the cavity

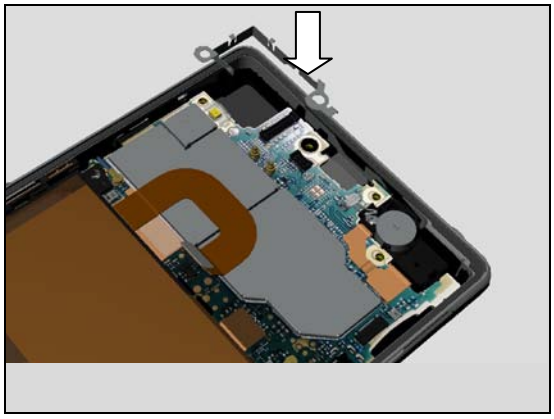

Secure the position with a pair of tweezers

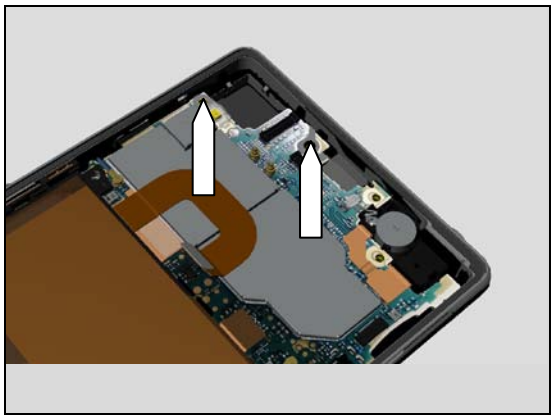

5.8 Camera

Use fingers to position Camera into the cavity

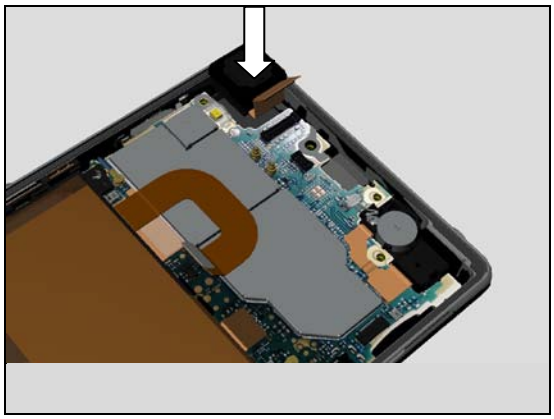

© Sony Mobile Communications AB – Company Internal

Re-Assembly

Press with fingers to secure the contact of Camera

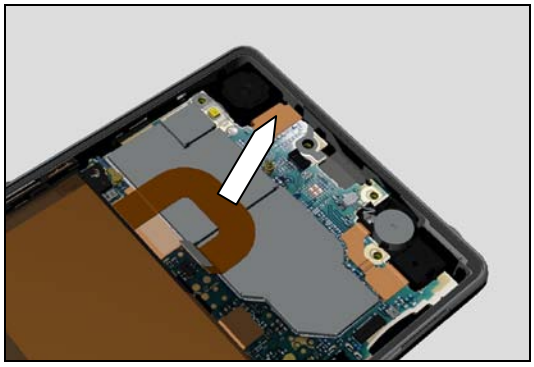

5.9 Rear Cover Assy

Press with fingers to secure the contact of Battery

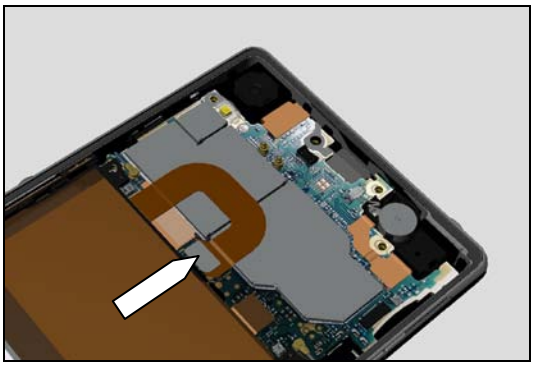

Follow the 4.15 removal and installation instruction to replace a new Adhesive WP Cover Rear

Use Isopropyl Alcohol - 99 % for clean around the edges of Main Frame Assy before assembly Rear Cover Assy

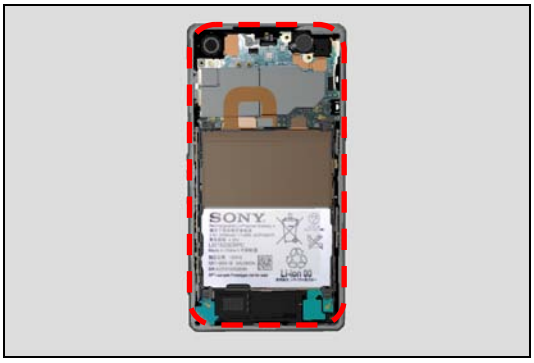

Place the Rear Cover Assy on the frame

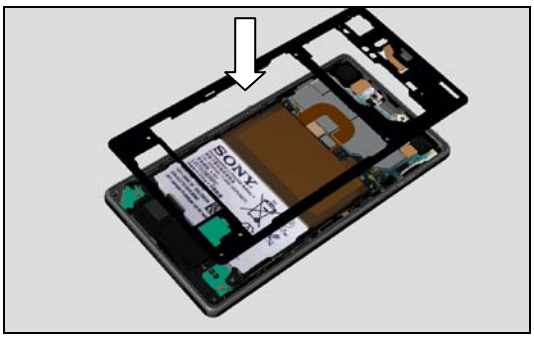

Press with fingers to secure the contact of Chat Camera

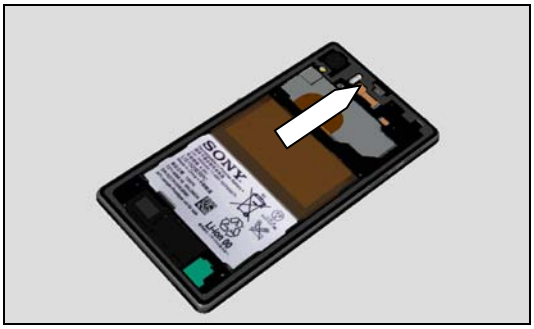

© Sony Mobile Communications AB – Company Internal

Re-Assembly

Upper inlay = Rear Cover Press Inlay
Lower inlay = Bottom Press Inlay
Place the phone in the Bottom Press Inlay and follow the instruction in 1003-9107 Tool Catalogue – mechanical and document Toothed Rack Press Instruction for use.

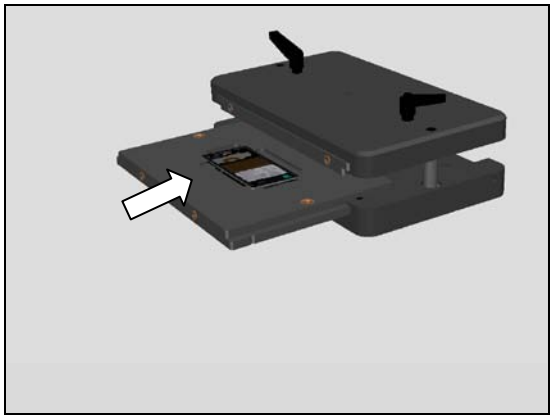

Press it with a pressure value of 483N +/- 50 N / 10 sec (pressure value is adjust from 600N because of the weight of the press fixture)

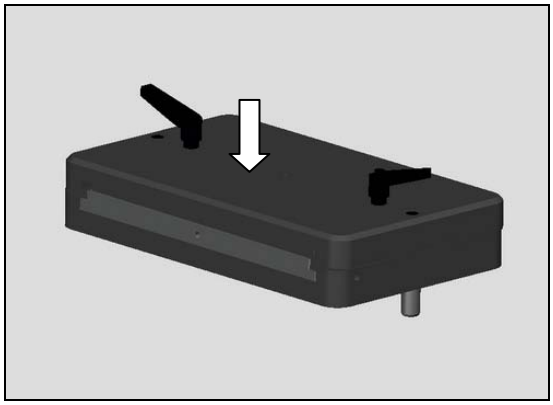

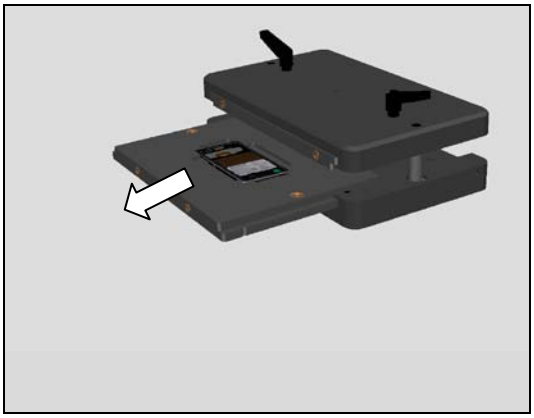

Apply 13 Ncm torque when tightening the Screw 3.5x1.4 with Torx Bits T4

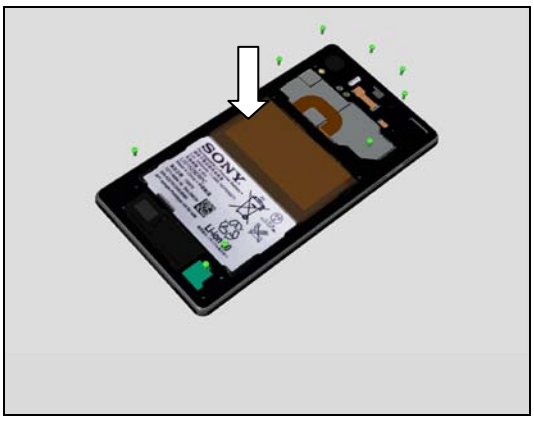

© Sony Mobile Communications AB – Company Internal

Re-Assembly

5.10 Sheet Battery

Use a Flex Film Assembly Tool and fingers for assembly the Sheet Battery on the Battery

5.11 Window Back

Follow the 4.18 removal and installation instruction to replace a new Adhesive WP Window Back

Use Isopropyl Alcohol - 99 % for clean around the edges of Rear Cover Assy before assembly Window Back

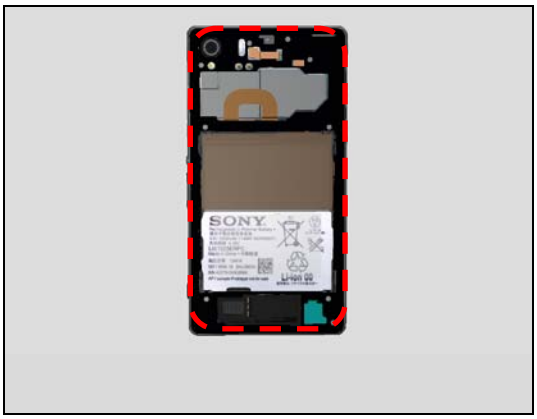

Place the Window Back on the Rear Cover Assy.

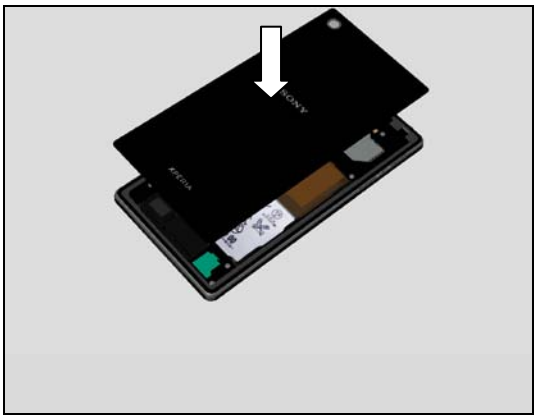

Make sure of an good alignment so the Window Back is centered

© Sony Mobile Communications AB – Company Internal

Re-Assembly

Upper inlay = Window Back Press Inlay
Lower inlay = Bottom Press Inlay
Place the phone in the Bottom Press Inlay and follow the instruction in 1003-9107 Tool Catalogue – mechanical and document Toothed Rack Press Instruction for use.

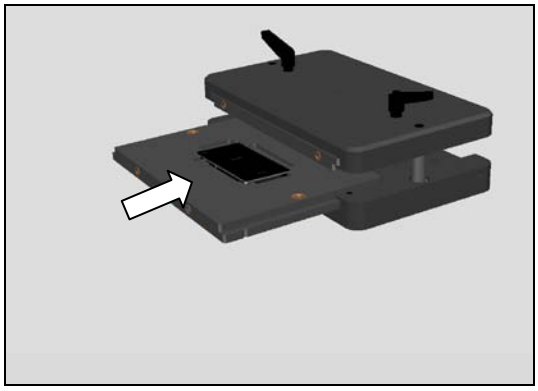

Press it with a pressure value of 483N +/- 50 N / 10 sec. (pressure value is adjust from 600N because of the weight of the press fixture)

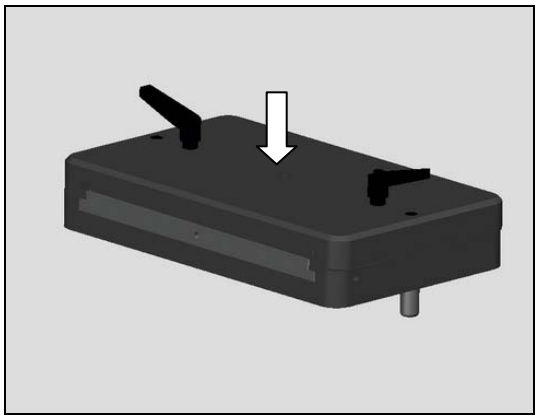

© Sony Mobile Communications AB – Company Internal

6 Revision History

Rev.	Date	Changes / Comments
1	2013-Sept-05	First Release
2	2013-Sept-12	System Problem

© Sony Mobile Communications AB – Company Internal